Міністерство освіти і науки України
Національний технічний університет
«Дніпровська політехніка»

Інститут Електроенергетики
(інститут)
Електротехнічний факультет
(факультет)
Кафедра електропривода
(повна назва)

ПОЯСНЮВАЛЬНА ЗАПИСКА
кваліфікаційної роботи ступеню _____маістра_____
(бакалавра, спеціаліста, магістра)

студента_____Мартинюка Василя Сергійовича _____
(ПІБ)
академічної групи _____141м-17-4_____
(шифр)
спеціальності 141 Електроенергетика, електротехніка та електромеханіка
(код і назва спеціальності)
спеціалізації[1] _____

за освітньо-професійною програмою Електромеханічні системи автоматизації та електропривод
(офіційна назва)
на тему ___Electromechanical system of the six-coordinate robot_____
_____
(назва за наказом ректора)

Керівники	Прізвище, ініціали	Оцінка за шкалою		Підпис
		рейтинговою	інституційною	
кваліфікаційної роботи	Худолій С.С.			
розділів:				
Економічний	Тимошенко Л.В,			
Technological part	Худолій С.С.			
Automated Electic drive	Худолій С.С.			
Study of electric drive dynamics	Худолій С.С.			

Рецензент				

Нормоконтролер	Казачковський М.М.			

Дніпро
2018

ЗАТВЕРДЖЕНО:
завідувач кафедри
електропривода
(повна назва)

_____ Казачковський М.М.
(підпис) (прізвище, ініціали)

«_____»_____20___року

ЗАВДАННЯ
на кваліфікаційну роботу
ступеня ____магістра_____
(бакалавра, спеціаліста, магістра)

студенту___Мартинюку В.С._____ академічної групи _____141м-17-4_____
(прізвище та ініціали) (шифр)
спеціальності 141 Електроенергетика, електротехніка та електромеханіка

спеціалізації[1] _____
за освітньо-професійною програмою Електроенергетика, електротехніка та електромеханіка
(офіційна назва)

на тему __ Electromechanical system of the six-coordinate robot _____
_____,

затверджену наказом ректора НТУ «Дніпровська політехніка» від _____№_____

Розділ	Зміст	Термін виконання
Technological part	Анализ литературы	
Automated electric drive	Расчет кинематики конструкции	
Study of electric drive dynamics	Моделирование системы	
Economic justificatioin	Расчет капитальных и эксплуатационных затрат	

Завдання видано _____ _____Худолій С.С._____
(підпис керівника) (прізвище, ініціали)

Дата видачі 15 жовтня 2018

Дата подання до екзаменаційної комісії _____

Прийнято до виконання _____ _____Мартинюк В.С._____
(підпис студента) (прізвище, ініціали)

РЕФЕРАТ

Пояснительная записка содержит 89 страниц, 25 рисунков, 4 таблицы, 7 источников, презентацию.

Объект детальной разработки: робот-манипулятор.

Цель работы: создание манипулятора в качестве лабораторной установки при университете «Хохшуле Ройтлинген», Германия.

По кинематической схеме произведены расчеты и выбраны двигатели требуемой мощности. Для управления двигателями выбран контроллер Arduino Mega 2560 с драйверами шаговых двигателей DM320T, DM542T и дополнительное оборудование: концевые выключатели, релейный модуль, источники питания.

В программе SolidWorks созданы модели деталей для печати. В программе MatLab Simulink разработаны модели двигателей. В пакете Simmechanics разработана механическая модель манипулятора. Получены зависимости скоростей шаговых двигателей от времени.

Был произведен расчет капитальных и эксплуатационных затрат методом комплексного расчета, связанного с производством оборудования автоматизации.

РЕФЕРАТ

Пояснювальна записка містить 89 сторінок, 25 малюнків, 4 таблиці, 7 джерел, презентацію.

Об'єкт детальної розробки: робот-маніпулятор.

Мета роботи: створення маніпулятора як лабораторної установки при університеті «Хохшуле Ройтлинген», Німеччина.

За кінематичній схемі проведено розрахунки та обрані двигуни необхідної потужності. Для управління двигунами обраний контролер Arduino Mega 2560 з драйверами крокових двигунів DM320T, DM542T і додаткове обладнання: кінцеві вимикачі, релейний модуль, джерела живлення.

У програмі SolidWorks створені моделі деталей для друку. У програмі MatLab Simulink розроблені моделі двигунів. У пакеті Simmechanics розроблена механічна модель маніпулятора. Отримано залежності швидкостей крокових двигунів від часу.

Був проведений розрахунок капітальних і експлуатаційних витрат методом комплексного розрахунку, пов'язаного з виробництвом устаткування автоматизації.

ABSTRACT

Explanatory note contains 89 pages, 25 figures, 4 tables, 7 sources, presentation.

The object of detailed development: a robot manipulator.

Objective: to create a manipulator as a laboratory unit at the University of Hochschule Reutlingen, Germany.

According to the kinematic scheme, calculations were made and the engines of the required power were selected. The Arduino Mega 2560 controller with DM320T, DM542T stepping motor drivers and accessories are selected for motor control, as well as additional equipment: limit switches, relay module, power supplies.

In the program SolidWorks has created parts models for printing. In the program MatLab Simulink developed engine models. In the package Simmechanics developed a mechanical model of the manipulator. The dependences of the stepper motor speeds on time are obtained.

The calculation of capital and operating costs was carried out by the method of complex calculation associated with the production of automation equipment.

TABLE OF CONTENTS

РЕФЕРАТ 1
РЕФЕРАТ 2
ABSTRACT 3
INTRODUCTION 6
1. TECHNOLOGICAL PART 8
1.1 Assignment of robotic arms 8
1.2 Use of robots in the industry 9
1.3 Classification of robots and their functional diagram 11
1.4 Robot control systems 15
1.5 Description of the robot used in the project 18
1.6 Technical characteristics of the robot 20
1.7 Characteristics of the electrical part of the robot 22
2. AUTOMATED ELECTRIC DRIVE 32
2.1 Drive Requirements 32
2.2 Calculation of the electromechanical part of the manipulator 33
2.2.1 Kinematic analysis 33
2.2.2 Dynamic analysis of the manipulator 42
2.2.3 Calculation of power of selected engines 44
2.3 Varieties of electromechanical systems and the basic principles of their construction 45
2.4 Stepper motor 50
2.5 Controlling stepper motors 54
2.6 Description of Arduino Mega 2560 56
2.7 Stepper Motor Control with Arduino Mega 57
3. STUDY OF ELECTRIC DRIVE DYNAMICS 58
3.1 What is SIMMECHANICS 58
3.2 Simulation of a stepper motor in Simulink 60
3.3 Simulation results in SimMechanics 63
4. ECONOMIC JUSTIFICATION 65
4.1 Capital Costs Calculation 68
4.2 Calculation of operating costs 72

4.2.1 Calculation of depreciation 72
4.2.2 Calculation of the annual payroll 74
4.2.3 Calculating annual maintenance costs 74
4.2.4 Calculating the cost of power consumption 75
4.3 Integrated method of calculating the costs associated with the manufacture of automation equipment 76
4.4 Findings 77
BIBLIOGRAPHY 78
ADDITION 79
PROGRAM CODE 85
FEEDBACK AND REVIEWS 88

INTRODUCTION

Today, robots are finding their way into more and more areas of our lives by removing mechanical work from humans. Robots are becoming more widely accepted and are spreading in usage. Both stagnant and mobile robots exist, which are programmed and controlled by computers. Robots can be divided into multiple categories, such as service, medical, industrial, as well as humanoid robots.

The use of mobile service robots, for humans in particular, grants the ability to provide autonomous and secure services in everyday life. Known fields of application of the service robots include vacuuming, lawn mowing and window cleaning.

Because of their precision, lack of fatigue, and speed, medical robots are indispensable in our lives. For surgical assistants they are becoming more and more commonplace, providing essential roles in innumerable clinics worldwide, and expanding the possibilities for doctors. Similarly, they are also being utilized in diagnostics and care.

Unlike the medical and service robots, industrial robots have been in use for much longer and have become indispensable in the industry. They provide man with a way to complete tedious, laborious, and otherwise lengthy tasks with precision and speed. Industrial robots are typically not mobile but are still versatile as they work in combination with flanged tools.

A humanoid robot is a sophisticated machine, more specifically a robot whose construction and function mimics the human form. Often the positions of the joints and the movements of a humanoid robot are inspired by the anatomy of the human form, with humanlike joint positions and movements

This thesis project deals with the electromechanical system of the six-coordinate robot manipulator and presents modes of operation and control methods. This robot uses a digital multi-axis control system. It consists of a six-coordinate kinematic system and six stepper motors.

During the project, a kinematic scheme of the robot was developed, and full calculations of the kinematics were performed, including the calculation and selection of stepper motors. This includes a control circuit, the creation of a robot control program, and the selection of all necessary components.

1. TECHNOLOGICAL PART

1.1 Assignment of robotic arms

“Robot”, meaning “to work” when translated from Czech, is a device that can be rotated in different directions, having the capability to perform certain operations. They are designed to perform repetitive actions and can replace humans for use in complex and occasionally dangerous tasks. The management of robotic manipulators is simple.

Industrial robot arms are equipped with one or more hands and a control panel. Within their range, they can move heavy parts at speeds up to 1000 times per minute, clearly outperforming man in both speed and accuracy in terms of repetitive work.

The operator controlling the robot manipulator monitors the actions on the screen or observes directly. Remote monitoring is possible thanks to the camera with which the robot arm is equipped. Often, robots are able to learn, because it is equipped with a special program. Once "having spent" it on technological process, the sequence of operations is remembered by the device, and then is precisely reproduced.

Robot-type manipulators are used in dangerous or inaccessible conditions; in particular to equip deep-water structures used to perform work at considerable depths, in astronautics, etc.

1.2 Use of robots in the industry

Industrial robots are designed to perform motor and control functions in the production process, while a manipulation robot, i.e., an automatic device consisting of a manipulator and a reprogrammable control device that generates the control actions defining the required movements of the actuators of the manipulator, are used to move production items and perform various technological operations.

The following definition of industrial robot has become widespread in literature: defined as “an automatic machine, stationary or mobile, consisting of an actuator in the form of a manipulator having several degrees of mobility, and a programmable program control device for performing motor functions and control functions in the production process”.

Industrial robots are usually one of the components of automated production systems used in flexible automated production, which, with a constant level of quality, can increase the productivity of labor in general.

It is economically advantageous to use industrial robots in conjunction with other means of automation of production, such as automated lines, sections and complexes.

Various aspects of the use of industrial robots are considered, as a rule, within the framework of typical industrial production projects; based on the existing requirements, the best option is chosen, which specifies the type of robots needed for this task, as well as the supply infrastructure issues (power lines, supply coolant - in the case of using liquid cooling elements of the tooling) and integration into the production process (provision of blanks / semi-finished products and return t finished product in an automatic line for the transfer of the next process step).

Industrial robots in the production process are able to perform basic and auxiliary technological operations.

The main technological operations include the operations of direct shaping, changing the linear dimensions of the workpiece, etc.

Auxiliary technological operations include transport operations, such as operations on loading and unloading technological equipment.

Among the most common actions performed by industrial robots are the following:

- transfer of materials (transfer of parts and blanks from the machine to the machine or from the conveyor to the conveyor, stacking, working with pallets, laying parts in containers, etc.);
- maintenance of machines and machines (loading and unloading of machines, retention of the workpiece);
- arc and spot welding;
- casting (especially casting under pressure);
- forging and stamping;
- spray coating;
- other processing operations include drilling, milling, riveting, water jet cutting, grinding, cleaning, and polishing;
- assembly of mechanical, electrical, and electronic parts;
- product quality control, etc.

1.3 Classification of robots and their functional diagram

The industrial robot has a mechanical part (including one or several manipulators) and a control system for this mechanical part. In addition, the robot can have sensitization tools, which form an information-sensor system as a whole, and the signals from which go to the control system.

Actuating mechanism

The executive mechanism of the manipulator, as a rule, is an open kinematic chain, the links of which are sequentially interconnected by joints of various types; in the overwhelming majority of cases, however, there are kinematic pairs of the Vth class (with one degree of mobility), and among the latter there are translational and rotational joints.

The combination and mutual arrangement of the links and joints determines the number of degrees of mobility, as well as the scope of the robot's manipulation system. It is usually assumed that the first three articulations in the actuator of the manipulator implement transport (or portable) degrees of mobility, ensuring the output of the working body to a specified place, and the rest realize orienting degrees of mobility (responsible for the desired orientation of the working body). Depending on the type of the first three joints, most robots fall into one of four categories:

- robots working in the Cartesian coordinate system - robots, in which all three initial articulations are translational;
- robots operating in a cylindrical coordinate system - robots that have two translational and one rotational one among the initial joints;
- robots operating in a spherical coordinate system - robots that have one translational and two rotational ones among the initial joints;
- robots operating in the angular, or rotational, coordinate system - robots, in which all three initial joints are rotational.

For some manipulators, the division of the degrees of mobility into portable and orienting is not accepted. An example would be manipulators with kinematic redundancy (i.e., with a number of degrees of mobility greater than six); here, the control of the movement of the working body and the management of its orientation are not “untied” for individual groups of joints.

In some cases, the industrial robot arm is mounted on a movable base, giving it additional degrees of mobility. Thus, the manipulator is mounted on rails or on a movable carriage which moves along a floor track or along hanging rails.

There are industrial robots and with closed kinematic chains, an example of which is the parallel robots, ie manipulation robots; in which the working body is connected to the base with at least two independent kinematic chains. This class of manipulation robots includes, in particular, the Gyu-Stewart platform and delta robots.

Working body

At the end of the manipulator (on his "wrist") is a working body - a device designed to perform a special task. As a working body can act as a gripping device or technological tool.

The most universal type of gripping device is a gripper, a device in which an object is gripped and held by relative movement of parts of a given device. As a rule, a gripper resembles the wrist of a human hand in its design; an object is gripped with the help of mechanical “fingers”, and a pneumatic suction cup is used to grip flat objects. Hooks are also used for lifting parts from conveyors, and scoops are used to lift liquids, grains, or granular substances. To capture the same set of parts of the same type, specialized designs are used; such as magnetic gripping devices.

By the method of holding the object, the gripping devices are divided into:

- grappling (mechanical tongs and devices with elastic working chambers into which fluid or compressed air is injected);
- supporting (in them the object is not clamped, but used to hold it the bottom surface, protruding parts of the object or the holes in it);
- holding (in the object they have a force effect due to various physical effects: vacuum, magnetic and electrostatic captures, adhesion, etc.).

The number of applications of industrial robots in which the tong is used to hold the working tool is relatively small. In most cases, the tool needed to perform a technological operation is attached directly to the wrist of the robot, becoming its working body. This may be a spray paint gun, welding spot welding gun, a welding head for arc welding, a circular knife, a drill, a milling cutter, a screwdriver, a wrench, etc.

Drives

Electric, hydraulic or pneumatic actuators are used to drive the links of the manipulator and the device of the gripper. Hydraulic drives are preferred in cases when it is necessary to provide a significant amount of development effort or high speed; usually such drives are supplied with large heavy-duty robots. Electric drives do not have the same high power or speed, but they have the ability to achieve the best accuracy characteristics. Finally, pneumatic actuators are usually used for small-sized robots that perform simple, fast cyclic operations.

It is estimated that approximately 50% of modern industrial robots use an electric drive, 30% use a hydraulic drive and 20% use a pneumatic drive.

Types of manipulators

- The manipulator (in mining) is the main mechanism of the drilling carriage, designed to move in the bottomhole space of an automatic feeder with a perforator (boring machine).
- Manipulator (in metallurgy) is a machine for performing auxiliary operations related to changing the position of the workpiece during metal forming. There are both rolling and forging manipulators. Forging and rolling shops use suspended and floor-mounted manipulators, which are a kind of tilters (mechanisms for turning (turning) products).
- Manipulator (in nuclear technology) is a device for working with radioactive substances, excluding direct human contact with these substances.
- Manipulators are equipped with hydrostats for doing oceanographic and other work at depths.
- The Gew-Stewart Platform is a type of parallel manipulator that uses an octahedral arrangement of racks and has six degrees of freedom. It is used in machine tools, underwater research, aviation rescue operations at sea, flight simulators, satellite dish positioning, in telescopes, and in orthopedic surgery.
- A crane is a mobile lifting machine that includes a jib type crane mounted on a truck chassis and is used for loading and unloading it.

1.4 Robot control systems

Two directions can be traced in the development of industrial robots control systems. One of them originates from the systems of programmed control of machine tools and resulted in the creation of automatically controlled industrial manipulators. The second led to the emergence of semi-automatic biotechnical and interactive systems, in which a human operator is involved in controlling the actions of an industrial robot.

Thus, industrial robots can be divided into the following three types, each of which, in turn, is divided into several varieties:

Automatic robots:

- Software robots (software-controlled robots) are the simplest variety of automatically controlled industrial robots, which are still widely used because of their cheapness at various industrial enterprises for servicing simple technological processes. In such robots there is no sensory part, and all actions are performed cyclically according to a hard program stored in the memory of the storage device.
- Adaptive robots (robots with adaptive control) - robots equipped with a sensor part (sensing system) and equipped with a set of programs. Signals coming to the control system from the sensors are analyzed by it, and depending on the results, a decision is made on further actions of the robot, suggesting a transition from one program to another (change of technological operation). The hardware and software are basically the same as in the previous case, but there are increased requirements for its capabilities.
- The trained robots are robots whose actions are completely formed during the training (a person with a special board sets the order of actions of the robot, and this procedure is recorded in the memory of the memory device).

- Intelligent robots (robots with elements of artificial intelligence) are robots that are able to independently perceive and recognize the situation using sensory devices, simulate a model of the environment, and automatically decide on further actions, as well as learning from their own experiences.

Biotechnical robots:

- Command robots (robots with command control) are manipulators in which the human operator remotely sets the movement in each joint from the command device (strictly speaking, these are not semi-robots, but “half-robots”).
- Replicating robots (robots with replicating controls) are manipulators that replicate the actions of a master device driven by an operator, kinematically similar to an actuator of a manipulator (as in the previous case, such manipulators can be considered "half-robots").
- Semi-automatic robots are robots under the control of which the human operator only sets the movement of the manipulator's body, and the control system of the robots independently forms coordinated movements in the joints.

Interactive robots:

- Automated robots (robots with automated control) are robots that alternate automatic control modes with biotechnical ones.
- Supervisory robots (robots with supervisory control) are robots that automatically perform all the steps of a given cycle of operations, but carry out the transition from one stage to another at the command of a human operator.
- Interactive robots (robots with interactive control) are automatic robots (of any kind) capable of interacting with a human operator using a language of one level or another (including sending text or voice commands and response messages from the robot).

Most modern robots operate on the basis of the principles of feedback, subordinate control and hierarchy of the robot control system.

The hierarchical construction of the robot control system involves dividing the control system into horizontal layers or levels: at the upper level, the overall behavior of the robot is controlled. At the planning level of movements, the required trajectory of the working body is calculated, and at the coordination level of drives, coordinated operation of the drives is organized, ensuring the required movement of the worker body, and, finally, at the drive level, the engine is directly controlled, which is responsible for the specific heat of mobility of the manipulator.

Subordinate control

Subordinate control is used to build a drive control system. If it is necessary to build a drive control system by position (for example, by the angle of rotation of the manipulator link), then the control system is closed by position feedback, and inside the control system by position, the speed control system with its own feedback on speed, within which the control loop over current - also with its feedback.

A modern robot is equipped not only with feedbacks on the position, speed and acceleration of links. When capturing parts, the robot must know if it successfully captured the part. If a part is fragile or its surface has a high degree of purity, complex systems with force feedback are built, allowing the robot to grab the part without damaging its surface or destroying it.

The robot is controlled, as a rule, by an industrial enterprise management system (ERP system) that matches the actions of the robot with the readiness of blanks and numerical control machines for performing technological operations.

1.5 Description of the robot used in the project

In this project, a model of a six-axis robot manipulator was created.

This is a small tabletop robot (Pic.1.1), which is made similar to an industrial six-axis robot. This project can be assembled from 3D-printed components or their processed aluminum components, inexpensive stepper motors and an Arduino controller are used.

The goal is to create an inexpensive version of an industrial robot for educational purposes or small manufacturing operations.

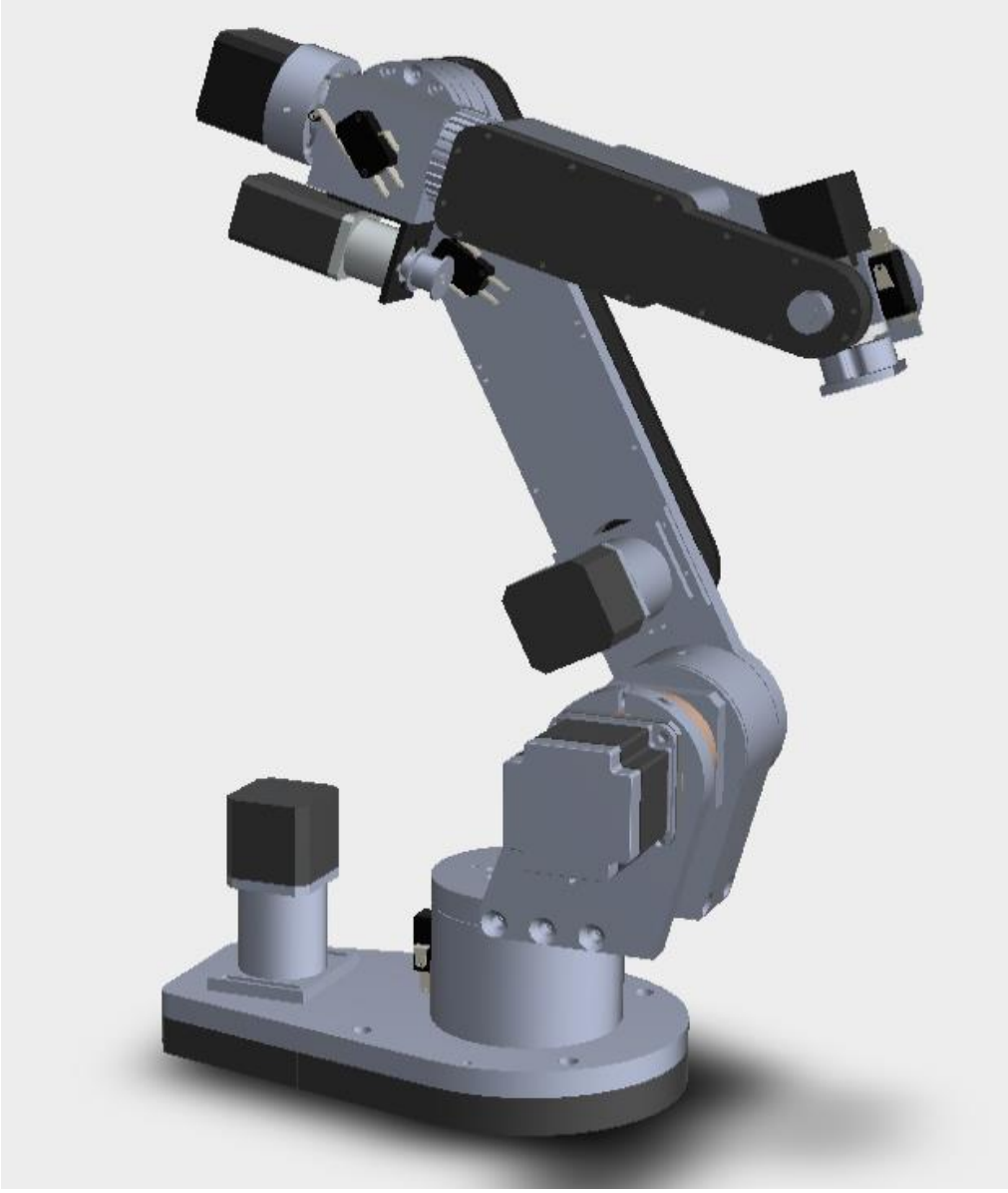

Picture 1.1: Appearance of the robot used in the project

This robot has a lifting capacity of 3-4 kilograms with a range of 3000 millimeters.

The distinctive features include:

dynamism;

accuracy for any duration of tact;

strength;

space saving;

maximum flexibility.

The original model of the robot is widely used in various fields:

application with other machines;

measurement, testing and verification;

palletizing;

metal cutting machines;

soldering;

insert, load;

mechanical restoration;

packaging and packaging;

other types of installation, dismantling.

1.6 Technical characteristics of the robot

Maximum working radius: 3000 mm;

Rated load capacity: 4 kg;

Positioning repeatability: +- 0.24 mm;

Number of axles: 6;

Mounting position: floor, wall, ceiling;

Installation area: 300 mm X 250 mm;

Weight: 35 kg;

Interface: USB;

Grab: gripper;

OS: Windows XP or recent, Mac OS X or recent, Linux.

Axis data

Table 1.1 Movement range:

A1	±170°
A2	-185°/65°
A3	-137°/163°
A4	±185°
A5	±120°
A6	±350°

As can be seen on the schematic below (Pic.1.2), 6 electric motors are involved in this model (J1...6), each of which is responsible for its own axis.

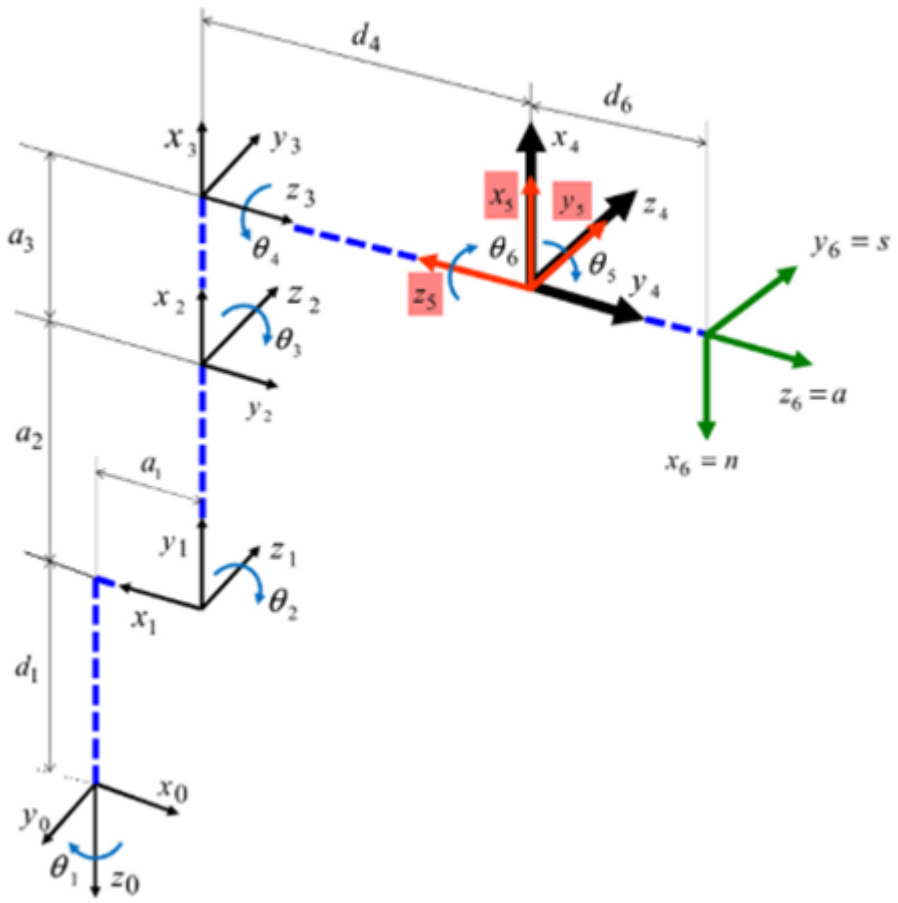

Picture 1.2: Axle location of the robot

Work area graphics

Picture 1.3 shows the graph of the manipulator working area.

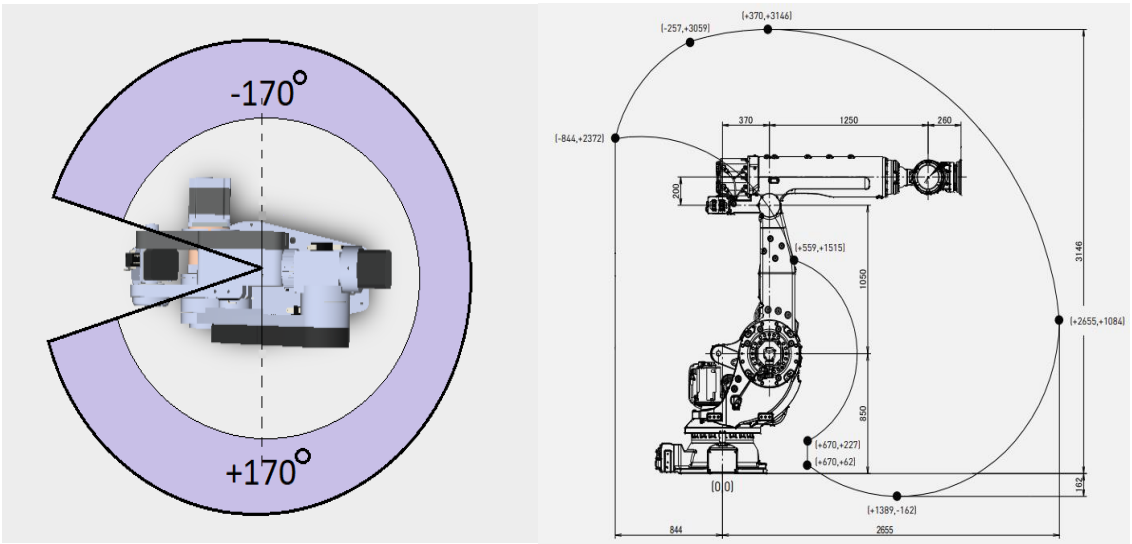

Picture 1.3: Manipulator working area

1.7 Characteristics of the electrical part of the robot

Table 1.2 Electrical characteristics of the robot

Microcontroller	ATmega 2560
Operating voltage	24VDC
Power supply (recommended)	7-12V
Supply voltage (limit)	6-20V
Digital I / O	54 (15 PWM)
Analog inputs	16
Maximum current per pin	40 mA
Maximum output current 3.3V	50 mA
Flash memory	256 KB, 8 KB downloader
SRAM	8 KB
EEPROM	4 KB
Heartbeat	16 MHz

To control the electric motors (Pic. 1.8) in the project, the Arduino Mega 2560 board was selected with the DM542T stepper motor drivers (Pic.1.6) for 1,2,3,5,6 axes and the DM320T driver (Pic. 1.7) for axis 4 connected. The connection is made according to the flowchart shown in the Picture 1.9. The general electrical circuit is shown in the Picture 1.10.

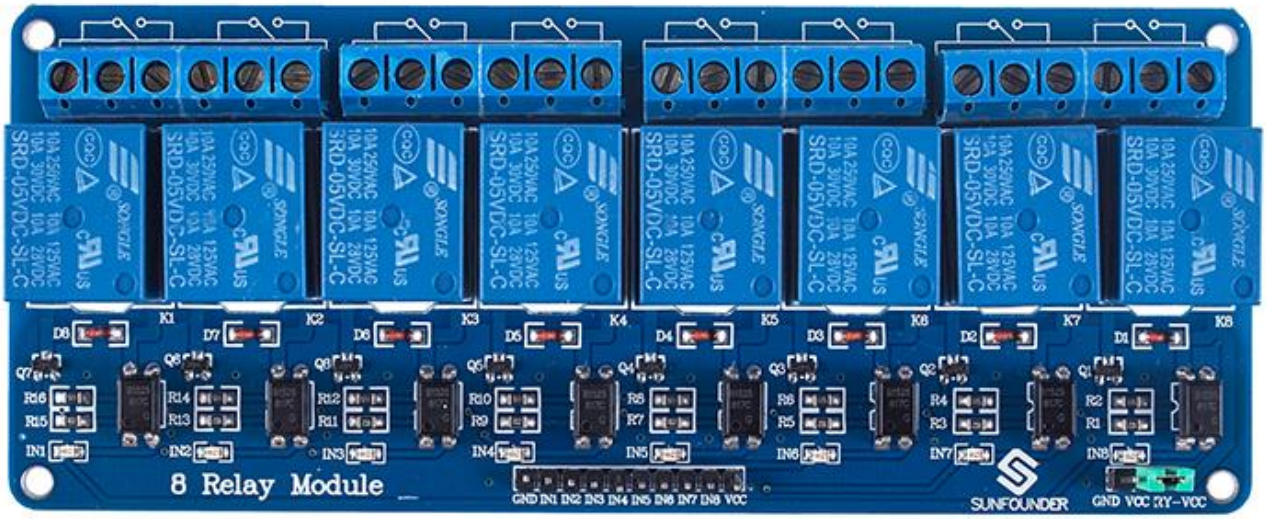

Picture 1.4: 8 Channel 5V Relay Module

The scheme uses an eight-channel DC 5V Relay Module (Pic. 1.4), which is designed for an additional power source. Since Arduino does not have enough current to power the relay board, an additional small 5 VDC power supply was installed.

Characteristics and operating principle of the relay

Referring to Picture 1.5: Component A is an electromagnet, B is an armature, C is a spring, D is a moving contact, and E is a fixed contact. There are two fixed contacts, a normally closed one and a normally open one. When the coil is not energized, the normally open contact is the one that is off, while the normally closed one is the other that is on.

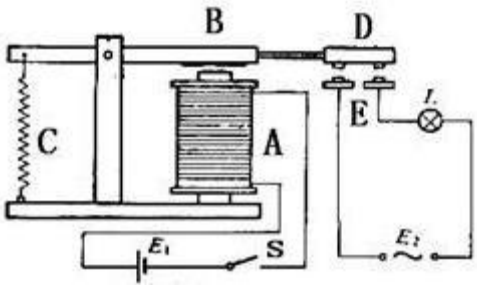

Picture 1.5 Principle of relay

When a certain voltage is applied to the coil, some current will pass through the coil thus generating the electromagnetic effect. The armature then overcomes the tension of the spring and is attracted to the core, thus closing the moving contact of the armature and the normally open contact (or you may say releasing the former and the normally closed contact). After the coil is de-energized, the electromagnetic force dissipates, and the armature moves back to the original position, releasing the moving contact and normally closed contact. The closing and releasing of the contacts results in power on and off of the circuit.

Features:

- Support control of 10A 30V DC and 10A 250V AC signals
- 5V 8-Channel Relay interface board
- LOW level trigger, equipped with an easy to recognize indicator stating the working status
- Each relay has NO and NC ports, easier to connect and control the connected devices
- Selection of plastic material for high temperature and better chemical solution performance.
- PCB size: 5.7 x 13.8 cm

As mentioned above, in the project drivers for stepping motors DM542T and DM320T were chosen.

DM542T

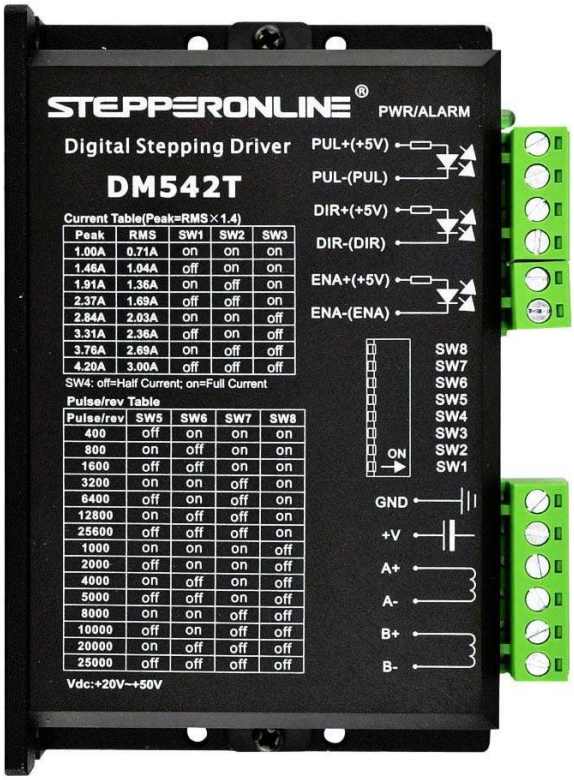

Picture 1.6: Stepper driver DM542T

The DM542T is a fully digital stepper driver developed with advanced DSP control algorithm based on the latest motion control technology. It has achieved a unique level of system smoothness, providing optimal torque and nulls mid-range instability. Its motor includes auto-identification and auto-configuration parameters, which offers quick setup to optimal modes with different motors. Compared with traditional analog drives, DM542T can drive a stepper motor at much lower noise, lower heating, and smoother movement. Its unique features make DM542T an ideal choice for high requirement applications.

Key Features:

- Input voltage 20-50VDC
- Anti-Resonance provides optimal torque and nulls mid-range instability
- Motor auto-identification and parameter auto-configuration when power on, offer optimal responses with different motors
- Multi-Stepping allows a low-resolution step input to produce a higher microstep output, thus offering smoother motor movement
- 15 selectable microstep resolutions including 400, 800, 1600, 3200, 6400, 12800, 25600, 1000, 2000, 4000, 5000, 8000, 10000, 20000, 25000
- Soft-start with no “jump” when powered on
- 8 selectable peak current including 1.00A, 1.46A, 1.91A, 2.37A, 2.84A, 3.31A, 3.76A, 4.20A
- Pulse input frequency up to 200 KHz, TTL compatible and optically isolated input
- Automatic idle-current reduction
- Suitable for 2-phase and 4-phase motors, works well with nema 17 driver, nema 23 driver
- Support of PUL/DIR modes
- Over-voltage and over-current protections

Electrical Specifications:

- Output Peak Current: 1.0~4.2A (3.0 RMS)
- Input Voltage: +20~50VDC (Typical 36VDC)
- Logic Signal Current: 7~16mA (Typical 10mA)
- Pulse Input Frequency: 0~200kHz
- Pulse Width: 2.5μS
- Isolation Resistance: 500MΩ

DM320T

Picture 1.7: Stepper driver DM320T

Picture 1.7 depicts a digital stepper drive implemented with advanced stepper control technology. It is easy to use and it can be used to drive 2-phase and 4-phase motors(from Nema 8-Nema 17 size) smoothly with less heat and noise. It works with 18-30VDC voltage and can provide max 2.2A peak current. You can set the DIP switches to get the current and microsteps you need.

Key Features:

- Anti-Resonance for optimal torque, extra smooth motion, low motor heating and noise
- Motor auto-identification and parameter auto-configuration for optimal torque from wide-range motors
- Step & direction (PUL/DIR) control
- Multi-Stepping for smooth motor movement
- Optically isolated inputs
- Input voltage 18-30VDC

- 8 selectable micro-step resolutions of 400-12800 via DIP switches
- 8 selectable output current settings of 0.3 – 2.2A via DIP switches
- Soft-start with no “jump” when powered on
- Pulse input frequency up to 60 KHz
- Automatic idle-current reduction
- Protections for over-voltage and over-current

Electrical Specifications:

- Output Peak Current: 0.3~2.2A (1.6 RMS)
- Input Voltage: +18~30VDC
- Logic Signal Current: 7~16mA (Typical 10mA)
- Pulse Input Frequency: 0~60kHz
- Isolation Resistance: 100MΩ

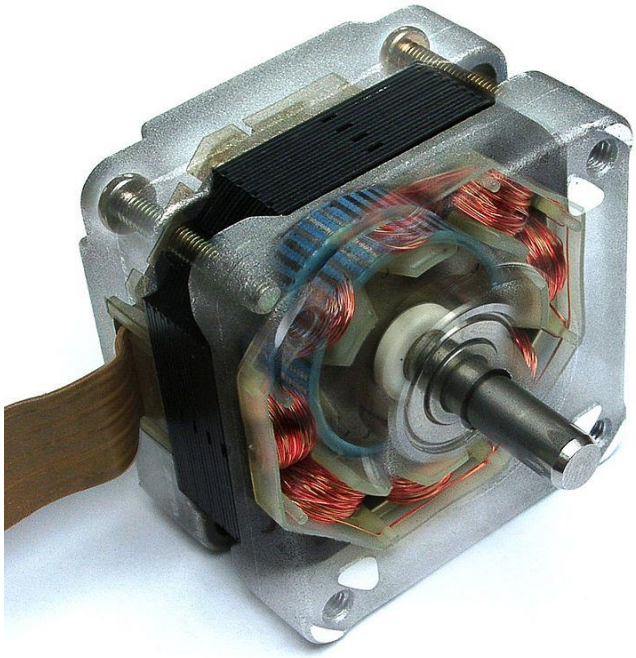

Picture 1.8: Modern stepper motor (photo montage)

A stepper motor is a machine that converts digital electrical signals into angular displacement of the rotor, performed with high precision. A stepper motor always works in conjunction with a control unit that receives and processes electrical signals and commutes the phases of a stepper motor.

Stepper motors are manufactured in various weight and size versions, with different angular steps and torques. The smallest models (2 x 2 x 3 cm) can easily be built into the smallest devices, such as mini-dispensers, indication arrow drives, and precision mechanics devices.

Medium sized models are used in displacement and positioning devices, for example, for orientation of parts before processing or in conveyors.

Large high-torque stepper drives move heavy equipment to a predetermined position, open and close doors, stretch rolls of paper, cardboard, cloth.

Even with no feedback, the position of the motor rotor is always known. The accuracy of the position can be several hundredths of a degree. Therefore, even heavy and bulky equipment can be positioned with high accuracy.

A stepper motor works off angular displacements with a given accuracy and is fixed in the desired position. The direction and amount of movement is set by a special control unit (Arduino Mega). Stepper motors are always paired with special devices that receive external signals, in accordance with which they move the rotor of the motor at a given speed in the right direction (Stepper motor driver).

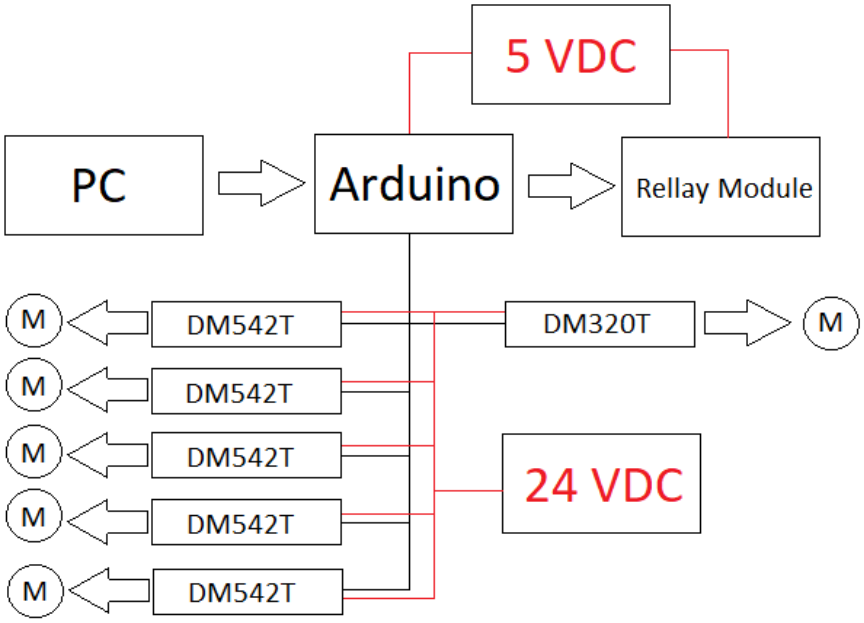

Picture 1.9 Structural diagram of the robot arm

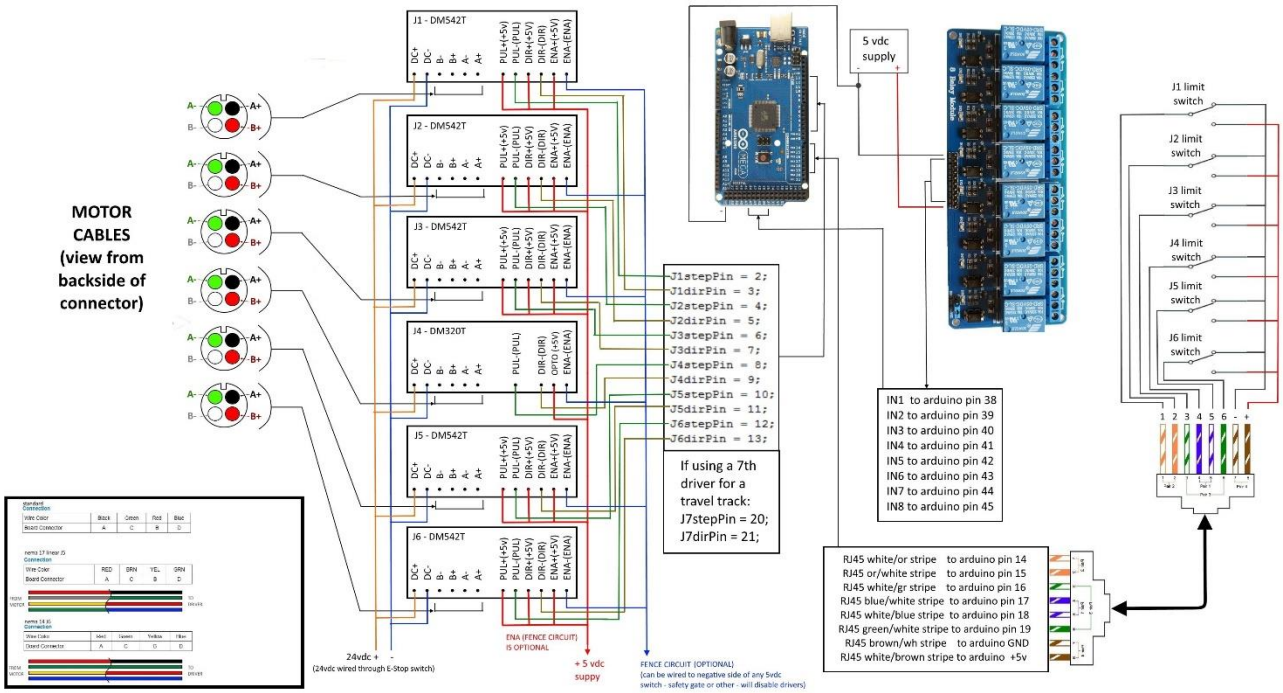

Picture 1.10: General electrical circuit

In the succeeding section of this thesis project, the following steps are necessary:

- choose a regulation system that is suitable for the chosen kinematics;
- make a complete system calculation;
- choose the right electric motors.

2. AUTOMATED ELECTRIC DRIVE

2.1 Drive Requirements

The drive used in this project must provide:

- Positioning accuracy – which is dependent on the step angle, the most accessible are motors with a value of 0.9 ° per step, or 400 steps per revolution. The number of revolutions of stepper motors are usually expressed in steps as pulses. As the number of steps grows, the torque drops steadily. Most of all, the rotation of the rotor of a stepper motor is similar to the movement of the second hand of the clock - with slight fading at the end and jerks at the beginning of every second (step). For this reason, the motor shaft experiences significant vibrations. The controller generates a limited number of pulses. Therefore, when using a stepper motor with an angle of 1.8 (200 steps), the controller will be able to provide twice the rotational speed (theoretically), while losing positioning accuracy twice.
- Saving the required torque - for this purpose, a stepper motor with a large holding moment, which depends on the supply voltage, is selected.
- No skip steps. This problem arises due to a shortage of torque and leads to a “failure to reach” to a given point.
- Movement speed and acceleration. In this case, the linear acceleration, which is set in the program / firmware of the robot, is transferred to the radial one - the stepping motor must turn its rotor in a very short period of time to achieve the specified feed along the axis.

2.2 Calculation of the electromechanical part of the manipulator

2.2.1 Kinematic analysis

The first kinematics problem: the kinematic scheme of the manipulator is specified and the laws of motion (laws of changes of generalized coordinates $q_i(t), i = 1,2, \dots n$) are required to determine the position of the singular point P (for example, gripper poles) in the reference system associated with stand.

Algorithm of the decision:

1) Create a matrix of coordinate transformations using the Denavit-Hartenberg method;
   - for progressive kinematic pairs:

$$A_v(\vec{i},q) = \begin{bmatrix} 1 & 0 & 0 & \pm q + x \\ 0 & 1 & 0 & y \\ 0 & 0 & 1 & z \\ 0 & 0 & 0 & 1 \end{bmatrix}, \tag{2.1}$$

$$A_v(\vec{k},q) = \begin{bmatrix} 1 & 0 & 0 & x \\ 0 & 1 & 0 & y \\ 0 & 0 & 1 & \pm q + z \\ 0 & 0 & 0 & 1 \end{bmatrix}, \tag{2.2}$$

$$A_v(\vec{j},q) = \begin{bmatrix} 1 & 0 & 0 & x \\ 0 & 1 & 0 & \pm q + y \\ 0 & 0 & 1 & z \\ 0 & 0 & 0 & 1 \end{bmatrix}, \tag{2.3}$$

- for rotational kinematic pairs, counting the direction of rotation counterclockwise - the direction of positive increment q:

$$A_w(\vec{i},q)=\begin{bmatrix}1 & 0 & 0 & x\\ 0 & \mathrm{Cos}\,q & -\mathrm{Sin}\,q & y\\ 0 & \mathrm{Sin}\,q & \mathrm{Cos}\,q & z\\ 0 & 0 & 0 & 1\end{bmatrix}, \tag{2.4}$$

$$A_w(\vec{j},q)=\begin{bmatrix}\mathrm{Cos}\,q & 0 & -\mathrm{Sin}\,q & x\\ 0 & 1 & 0 & y\\ \mathrm{Sin}\,q & 0 & \mathrm{Cos}\,q & z\\ 0 & 0 & 0 & 1\end{bmatrix}, \tag{2.5}$$

$$A_w(\vec{k},q)=\begin{bmatrix}\mathrm{Cos}\,q & -\mathrm{Sin}\,q & 0 & x\\ 0 & 0 & 0 & y\\ \mathrm{Sin}\,q & \mathrm{Cos}\,q & 1 & z\\ 0 & 0 & 0 & 1\end{bmatrix}, \tag{2.6}$$

where x, y, z are coordinates of origin O_{i+1} in the system $O_iX_iY_iZ_i$ coordinates.

It should be noted that in the general case the angle of rotation $q \in [0,\pi], i.e - 1 \leq \sin q \leq 1, -1 \cos q \leq 1$.

To compile matrices of coordinate transformations using the above templates, it is enough to know: the type of kinematic pair (rotational or translational) relative to which axis the movement takes place, and which generalized coordinate it is characterized.

2) Based on the kinematic scheme of the manipulator, we represent the displacement of the singular point P as a sequence of movements along each generalized coordinate. Let's make a chain of displacements from the 0-th link (the base of the manipulator) to the n-th link, relative to which the singular point is fixed.

3) Determine the position of point P of the manipulator in the coordinate system associated with the n-th link $\vec{r_p}^{0} = (x_p\ y_p\ z_p\ 1)$ and in the coordinate system associated with the base of the manipulator

$$\vec{r_p}^{0} = f\big(q_1(t), q_2(t), \dots\ q_k(t)\big) = A_0^1 \cdot\ A_1^2 \cdot\ A_2^3 \dots\ A_{n-1}^n \cdot\ \vec{r_p}^{n} = T_n \cdot\ \vec{r_p}^{n} \qquad (2.7)$$

where $T_n = A_0^1 \cdot A_1^2 \cdot A_2^3 \cdot \dots A_{n-1}^n$ is the common coordinate transformation matrix from the n - th link to the 0 - th link (base of the manipulator).

4) Define the linear velocity and acceleration of the singular point in the coordinate system associated with the base of the manipulator. Given that $\vec{r_p}^{n}$ determines the position of the point P of the n - th link in the coordinate system associated with the n-th link, we get:

$$\vec{v}_p^0 = \vec{r}_p'^0 = \frac{d}{dt}\left(T_n \cdot \vec{r}_p^n\right) = \frac{d}{dt} T_n \cdot \vec{r}_p^n,$$

$$\vec{r}_p''^0 = \vec{a}_p^0 = \frac{d^2}{dt^2}\left(T_n \cdot \vec{r}_p^n\right) = \frac{d^2}{dt^2} T_n \cdot \vec{r}_p^n. \qquad (2.8)$$

According to the inverse problem of the dynamics of the manipulator, we get:

$$\frac{d}{dt}T_i = \sum_{k=1}^{i} \frac{\partial T_i}{\partial q_k} \cdot \dot{q}_k; \frac{\partial T_i}{\partial q_k} = \begin{cases} U_{ik}, & k \le i, \\ 0, & k > i; \end{cases}$$

$$U_{ik} = A_0^1 \cdot A_1^2 \cdot \ldots \cdot \frac{d\,A_{k-1}^k}{dq_k} \cdot \ldots A_{n-1}^n = A_0^1 \cdot A_1^2 \cdot \ldots \cdot \Omega_i \cdot A_{i-1}^i \cdot \ldots A_{n-1}^n;$$

$$\frac{d^2}{dt^2}T_i = \sum_{j=1}^{i}\sum_{k=1}^{i} V_{ijk} \cdot \dot{q}_j \cdot \dot{q}_k + \sum_{j=1}^{i} U_{ij} \cdot \ddot{q}_j; \; V_{ijk} = \frac{dU_{ij}}{dqk} = V_{ikj};$$

$$Vijk = \begin{cases} A_0^1 \cdot A_1^2 \cdot \ldots \cdot A_{i-2}^{i-1} \cdot \frac{d\,A_{i-1}^i}{dq_i} \cdot \ldots \cdot A_{k-2}^{k-1} \cdot \frac{d\,A_{k-1}^k}{dq_k} \cdot \ldots A_{n-1}^n, & j > k, \\ A_0^1 \cdot A_1^2 \cdot \ldots \cdot A_{k-2}^{k-1} \cdot \frac{d\,A_{k-1}^k}{dq_k} \cdot \ldots \cdot A_{i-2}^{i-1} \cdot \frac{d\,A_{i-1}^i}{dq_i} \cdot \ldots A_{n-1}^n, & j < k, \\ A_0^1 \cdot A_1^2 \cdot \ldots \cdot A_{j-2}^{j-1} \cdot \frac{d^2\,A_{j-1}^j}{dq_j^2} \cdot \ldots A_{n-1}^n, & j = k. \end{cases} \quad (2.9)$$

Calculate the derivatives of the coordinate transformation matrices:

- for progressive kinematic pairs:

$$\frac{d\,A_v(\vec{i},q)}{dq} = \Omega_v(\vec{i},q) = \begin{bmatrix} 0 & 0 & 0 & \pm 1 \\ 0 & 0 & 0 & 0 \\ 0 & 0 & 0 & 0 \\ 0 & 0 & 0 & 0 \end{bmatrix},$$

$$\frac{d\,A_v(\vec{j},q)}{dq} = \Omega_v(\vec{j},q) = \begin{bmatrix} 0 & 0 & 0 & 0 \\ 0 & 0 & 0 & \pm 1 \\ 0 & 0 & 0 & 0 \\ 0 & 0 & 0 & 0 \end{bmatrix},$$

$$\frac{d\,A_v(\vec{k},q)}{dq} = \Omega_v(\vec{k},q) = \begin{bmatrix} 0 & 0 & 0 & 0 \\ 0 & 0 & 0 & 0 \\ 0 & 0 & 0 & \pm 1 \\ 0 & 0 & 0 & 0 \end{bmatrix},$$

$$\frac{d^2\,A_{v\,j-1}^{\;j}}{dq_j^2} = \Omega_v^2 = 0; \quad (2.10)$$

- for rotational kinematic pairs:

$$\frac{dA_w(\vec{i},q)}{dq} = \Omega_w(\vec{i},q)\cdot A_w(\vec{i},q) =$$

$$= \begin{bmatrix} 0 & 0 & 0 & 0 \\ 0 & 0 & -1 & 0 \\ 0 & 1 & 0 & 0 \\ 0 & 0 & 0 & 0 \end{bmatrix} \cdot \begin{bmatrix} 1 & 0 & 0 & x \\ 0 & \mathrm{Cos}\,q & -\mathrm{Sin}\,q & y \\ 0 & \mathrm{Sin}\,q & \mathrm{Cos}\,q & z \\ 0 & 0 & 0 & 1 \end{bmatrix},$$

$$\frac{dA_w(\vec{j},q)}{da} = \Omega_w(\vec{j},q)\cdot A_w(\vec{j},q) =$$

$$= \begin{bmatrix} 0 & 0 & 1 & 0 \\ 0 & 0 & 0 & 0 \\ -1 & 0 & 0 & 0 \\ 0 & 0 & 0 & 0 \end{bmatrix} \cdot \begin{bmatrix} \mathrm{Cos}\,q & 0 & -\mathrm{Sin}\,q & x \\ 0 & 1 & 0 & y \\ \mathrm{Sin}\,q & 0 & \mathrm{Cos}\,q & z \\ 0 & 0 & 0 & 1 \end{bmatrix},$$

$$\frac{dA_w(\vec{k},q)}{dq} = \Omega_w(\vec{k},q)\cdot A_w(\vec{k},q) =$$

$$= \begin{bmatrix} 0 & -1 & 0 & 0 \\ 1 & 0 & 0 & 0 \\ 0 & 0 & 0 & 0 \\ 0 & 0 & 0 & 0 \end{bmatrix} \cdot \begin{bmatrix} \mathrm{Cos}\,q & -\mathrm{Sin}\,q & 0 & x \\ 0 & 0 & 0 & y \\ \mathrm{Sin}\,q & \mathrm{Cos}\,q & 1 & z \\ 0 & 0 & 0 & 1 \end{bmatrix},$$

$$\frac{d^2 A_w(\vec{i},q)}{dq^2} = \Omega_w^2(\vec{i},q) = \begin{bmatrix} 0 & 0 & 0 & 0 \\ 0 & -1 & 0 & 0 \\ 0 & 0 & -1 & 0 \\ 0 & 0 & 0 & 0 \end{bmatrix},$$

$$\frac{d^2 A_w(\vec{j},q)}{dq^2} = \Omega_w^2(\vec{j},q) = \begin{bmatrix} -1 & 0 & 0 & 0 \\ 0 & 0 & 0 & 0 \\ 0 & 0 & -1 & 0 \\ 0 & 0 & 0 & 0 \end{bmatrix},$$

$$\frac{d^2 A_w(\vec{k},q)}{dq^2} = \Omega_w^2(\vec{k},q) = \begin{bmatrix} -1 & 0 & 0 & 0 \\ 0 & -1 & 0 & 0 \\ 0 & 0 & 0 & 0 \\ 0 & 0 & 0 & 0 \end{bmatrix}. \qquad (2.11)$$

The angular and linear velocities of singular points of the links of the manipulator can be determined by the recursive formulas for the rotational kinematic pair:

$$\vec{w_i} = \vec{w_{i-1}} + l_{i-1} \cdot \vec{q_i}, \ \ \vec{V_i} = \vec{w_i} \times \vec{P_i} + \vec{V_{i+1}} \qquad (2.12)$$

for progressive kinematic pair:

$$\vec{w_i} = \vec{w_{i+1}}, \ \ \vec{V_i} = \vec{l_{i+1}^T} \cdot \vec{q_i} + \vec{w_i} \times \vec{P_i} + \vec{V_{i+1}}, \qquad (2.13)$$

Where $\vec{w_i}, \vec{w_{i+1}}$ are the angular velocity vectors of the i-th and i + 1-st links of the manipulator; $\vec{V_i}, \vec{V_{i+1}}$ are the linear velocity vectors of the i-th and i + 1 are the links of the manipulator; $\vec{q_i}$ represents the matrix columns of the generalized coordinate and the generalized velocity; l_{i-1} is the radius vector from the axis of rotation of the angular generalized coordinate $q_i$to the singular point i + 1-st link of the manipulator; and $\vec{P_i}$ is the radius vector of a singular point of the i-th link of the manipulator in the coordinate system $O_iX_iY_iZ_i$.

This completes the algorithm for solving the direct kinematic problem.

In the second kinematic problem, which is inverse to the problem of the position of the manipulators, the kinematic scheme of the manipulator is specified for the position and orientation of the gripper for the moment of time m t in the coordinate system associated with the base of the manipulator. Required to determine the values of the generalized coordinates $q_i(t_m), i = 1,2, \dots n$, due to the preset gripper position $r_p^{\rightarrow 0}$. You can set the position of the gripper, like any solid body, using three linear $x(t), y(t), z(t)$ and three angular coordinates $\alpha(t), \beta(t), \gamma(t)$.

The solution algorithm: steps 1) –4) repeat the corresponding steps of the algorithm for solving the first kinematic problem.

5) on the basis of (2.7) we calculate $q_i(t_m), i = 1,2, \dots n$ by the formula:

$$r_p^{\rightarrow n} = (T_n)^{-1} \cdot r_p^{\rightarrow 0} \qquad (2.14)$$

- for the moment of time t_m can be written:

$$r_p^{\rightarrow n} = f\big(t_m, x(t_m), y(t_m), z(t_m), \alpha(t_m), \beta(t_m), \gamma(t_m)\big),$$
$$T_m = F\big(t_m, q_1(t_m), q_2(t_m), \dots\ q_i(t_m), \dots\ q_n(t_m)\big),$$

that is, equation (2.14) is in general a system of six nonlinear equations

$$x(t_m) = F_1\big(t_m, q_1(t_m), q_2(t_m), \dots\ q_i(t_m), \dots\ q_n(t_m)\big),$$
$$y(t_m) = F_2\big(t_m, q_1(t_m), q_2(t_m), \dots\ q_i(t_m), \dots\ q_n(t_m)\big),$$
$$z(t_m) = F_3\big(t_m, q_1(t_m), q_2(t_m), \dots\ q_i(t_m), \dots\ q_n(t_m)\big),$$
$$\alpha(t_m) = F_4\big(t_m, q_1(t_m), q_2(t_m), \dots\ q_i(t_m), \dots\ q_n(t_m)\big),$$
$$\beta(t_m) = F_5\big(t_m, q_1(t_m), q_2(t_m), \dots\ q_i(t_m), \dots\ q_n(t_m)\big),$$
$$\gamma(t_m) = F_6\big(t_m, q_1(t_m), q_2(t_m), \dots\ q_i(t_m), \dots\ q_n(t_m)\big), \qquad (2.15)$$

The method of solving (2.15) depends on the number of generalized coordinates of the manipulator. If n = 6, the system has a unique solution; for n> 6, the same position of the gripper can correspond to different sets of values of generalized coordinates. If n <6, then a solution exists for a limited set of gripper positions, i.e., the working area of the manipulator has limitations.

Conducting a kinematic analysis according to the presented algorithms allows one to formalize the computation process, reduce training time, and reduce the number of errors. Implementing the Lagrange equations allows development of efficient algorithms for automated analysis of manipulators. The kinetic energy of the manipulator is determined by the formula:

$$E_k = 0.5 \cdot \sum_{i=1}^{n} tr\left(\frac{d}{dt}T_i \cdot H_i \cdot \left(\frac{d}{dt}T_n\right)^T\right),$$

$$H_i = \begin{matrix} J_{xx}^{(i)} & J_{xy}^{(i)} & J_{xz}^{(i)} & m_i \cdot x_i \\ J_{yx}^{(i)} & J_{yy}^{(i)} & J_{yz}^{(i)} & m_i \cdot y_i \\ J_{zx}^{(i)} & J_{zy}^{(i)} & J_{zz}^{(i)} & m_i \cdot z_i \\ m_i \cdot x_i & m_i \cdot y_i & m_i \cdot z_i & m_i \end{matrix},$$

In these equations, H_i represents the matrix characterizing the inertia of the i-th link; m_i is the mass of the i-th link; x_i, y_i, z_i are the coordinates of the center of gravity of the i-th link in the coordinate system associated with i-th link; and $J_{xx}^{(i)}, J_{xy}^{(i)}, \dots J_{zz}^{(i)}$ are the inertia tensor elements calculated for the i-th link in the coordinate system associated with the i-th link.

The potential energy of the manipulator is calculated by the formula:

$$E_p = -\sum_{i=1}^{n} m_i \cdot G^T \cdot T_i \cdot \vec{P_i}, G^T = [0 \quad 0 \quad -g \quad 0],$$

where g is the acceleration of gravity.

The Lagrange equation of the II-nd kind has the form:

$$\frac{d}{dt}\frac{\partial E_k}{\partial q_i} - \frac{\partial E_k}{\partial q_i} + \frac{\partial E_p}{\partial q_i} = Q_i \qquad (2.16)$$

Where Q_i is the generalized nonpotential forces, that is, projections onto the axes of kinematic pairs of moments (if rotational pairs) and forces (if translational pairs). After transformations (2.16), we write the second-kind Lagrange equation in the matrix form:

$$\sum_{i=j}^{n}\sum_{k=1}^{i} tr\left(U_{ij}\cdot H_i\cdot U_k^T\right)\cdot q_k + \sum_{i=j}^{n}\sum_{k=1}^{i}\sum_{l=1}^{i} tr\left(U_{ij}\cdot H_i\cdot U_{ikl}^T\right)\cdot q_k\cdot q_1 - \sum_{i=j}^{n} m_i\cdot G^T\cdot U_{ij}\cdot P_i^{\rightarrow} = Q_i \qquad (2.17)$$

Where

$$G^T = [0 \quad 0 \quad -q \quad 0];$$

$$U_{ij} = \frac{d}{dq_j}\cdot\left(A_1\cdot A_2\cdot A_2\cdot \dots A_{j-1}\cdot A_j\cdot \dots A_{i-1}\cdot A_i\right) =$$

$$= A_1\cdot A_2\cdot A_2\cdot \dots A_{j-1}\cdot \frac{d}{dq_j}A_j\cdot \dots A_{i-1}\cdot A_i =$$

$$= A_1\cdot A_2\cdot A_2\cdot \dots A_{i-1}\cdot \Omega_i\cdot A_j\cdot \dots A_{i-1}\cdot A_i);$$

Where U_{ij} is the matrix of partial derivatives of the radius-vector of the center of mass of the i-th link along the generalized coordinate q_j; A_i is the coordinate transformation matrix of the i-th link; Ω_i is the auxiliary matrix for calculating derivatives; H_i is the inertia matrix i-th link; q_i, q_i are the generalized coordinate and speed i-th link; m_i is the mass of the i-th link; g is the acceleration due to gravity; $P_i^{\rightarrow}$ is the radius vector of the center of mass of the i-th link; Q_i are the generalized nonpotential forces, that is, projections onto the axes of kinematic pairs of moments (if rotational pairs) and forces (if translational pairs).

2.2.2 Dynamic analysis of the manipulator

The direct problem of dynamics: according to a given law of motion (the law of change of the generalized coordinates $q_i(t), i = 1, 2, \dots n$) it is required to define the generalized forces providing this movement. Differentiating $q_i(t)$, will get $\dot{q_i}(t), \ddot{q_i}(t)$ and calculate the quantities in the left side of equation (2.17). Consequently, the generalized forces Q_i will be uniquely identified. This completes the algorithm for solving the direct problem of dynamics.

The inverse problem of dynamics consists in determining the law of motion for given generalized forces Q_i. Assuming known values of generalized coordinates $q_i(t_0)$ and speeds $\dot{q_i}(t_0)$ at the initial moment of time t_0, equation (2.17) can be converted to the form:

$$\sum_{i=1}^{n} a_{ij}(t_0) \cdot \ddot{q_i}(t_0) = b_i(t_0), j = 1, 2, \dots n, \qquad (2.18)$$

Where $a_{ij}(t_0), b_i(t_0)$ are time determined coefficients t_0, dependent on $q_i(t_0), \dot{q_i}(t_0), Q_i(t_0)$.

The solution of the system of equations (2.18) will be sought by the formula:

$$\ddot{q_i}(t_0) = (a_{ij}(t_0))^T \cdot b_i(t_0), i = 1, 2, \dots n.$$

Giving infinitesimal increments of Δt can restore the dependence $\ddot{q_i}(t_0)$ and calculate

$$q_i(t) = \iint \ddot{q_i}(t) dt^2. \qquad (2.19)$$

This completes the algorithm for solving the inverse problem of dynamics.

With certain skills, the compilation of the matrix Lagrange equation (2.17) is reduced to the implementation of formal transformation procedures for known matrices.

Simulation of the motion of the manipulator is performed according to the following algorithm:

1) define the boundaries of the sections of the trajectory of point P, within which the parameters of the load are constant $S_0, S_1, \dots S_m$;

2) perform sequentially kinematic analysis for the trajectory sections $S_0S_1, S_1S_2, S_2S_3, \dots S_{m-1}S_m$. Determine the values of the generalized coordinates, velocities and accelerations corresponding to the points $S_v, v = 1, m$ the trajectory of the pole gripper manipulator.

3) determine the inertial characteristics of the links of the manipulator;

4) determine the forces and moments of resistance to the movement of the pole of the gripper;

5) define the driving forces and moments in kinematic pairs;

6) let's make a mathematical model of the dynamics of the manipulator with the load;

7) perform dynamic analysis for trajectory sections $S_0S_1, S_1S_2, S_2S_3, \dots S_{m-1}S_m$.

2.2.3 Calculation of power of selected engines

Table 2.1 Power of selected engines

Abbreviation	$U = I \cdot R$	$Pel = I \cdot U + I \cdot U$	$Pm = Pel \cdot \eta$
17HS15-1684S-HG20	26,88 V	9,04 W	8.14 W
23HS22-2804S-HG50	2,52 V	14,1 W	12,7 W
17HS15-1684S-HG50	2,7 V	9,1 W	8,2 W
11HS20-0674S-PG14	6,2 V	8,3 W	6,73 W
17LS19-1684E-200G	2,8 V	9,4 W	8,5 W
14HS13-0804S-PG19	5,44 V	8,7 W	7 W

From these calculations it follows that all selected engines are suitable for this system.

2.3 Varieties of electromechanical systems and the basic principles of their construction

There are many electromechanical systems that differ in the principle of operation, structure, elements, the principle of control of the actuating device, the type of power sources, etc. According to the method of comparing signals, electromechanical systems can be classified in the following ways:

- analog, in which the error signal is allocated by various methods in analog form;
- digital, in which the setting device is a computer, and the error signal is allocated in digital form in the form of a code;
- mixed digital-analog.

According to the structural scheme, electromechanical systems can be:

- single and dual channel;
- with one or more receiving devices;
- With serial or parallel corrective devices, simple and interconnected complex ones.

In practice, the most common are single-channel tracking systems.

To improve the accuracy, two-channel tracking systems are used, known as coarse and precise sampling systems. In the case when the total error is calculated in angular seconds with a large ratio of electrical reduction, three-channel tracking systems are also used. Examples are known when various objects are controlled from a single master; which utilize several receiving devices.

According to the type of measuring elements, tracking systems and regulators can have:

- inductive;
- induction;
- potentiometric;
- photoelectric;
- capacitive;
- generator;
- other sensors.

The spread of inductive and inductive elements that best meet modern operational requirements.

According to the type of actuating devices, tracking systems and regulators can be hydraulic, pneumatic and combined (with couplings), with alternating and direct current electric motors, stepper motors, torque motors, etc. However, this manual covers only electrical devices.

Depending on the type of actuators in low-power systems, semiconductor amplifiers of alternating and direct currents are mainly used.

In systems of average power magnetic amplifiers and thyristor converters can be used. In powerful systems, electromachine amplifiers and thyristor converters are used.

By the principle of control of the executive engine, tracking systems and continuous-action regulators with proportional signal changes are most prevalent. A voltage proportional to the error angle is applied to the motor control winding, and accordingly, the rotational speed of the executive engine is proportional to the error signal. A relay-type control is also used, in which the maximum voltage is applied to the motor control winding at a certain error angle or at a certain value of the control signal. When the motor is frequency controlled, pulses of constant duration are applied to the control winding, but their repetition frequency changes, or their duration changes at a constant repetition frequency. The engine speed is proportional to the frequency of the pulses or their duration.

Control schemes are possible in which, with a small mismatch, there is a linear portion of the signal change, and for some given error angle, relay control is used. There are other principles of control actuators.

The varieties are naturally conditional. They indicate only a wide variety of electromechanical systems.

All electromechanical systems are divided into 5 types:

- positional action, for example, magnetic heads positioning system.
- constant speed. Their purpose is to maintain a given constant speed of the output link.
- variable speed. Designed to move the output link with a given acceleration at any given point in time.
- tracking type (tracking systems). The most common of these are the remote tracking systems for angular and linear movements. They perform with a certain accuracy the transmission of angle or linear displacement with a given load on the output axis from analog and measuring elements or digital computers as setting devices, and the law of variation in the movement of the input axis or signal from a computer in angle, speed and acceleration can have any form, including arbitrary and random function of time.
- combined type. It should be noted that many, if not all, positioning systems belong to this type, since they usually require the implementation of two or three of the above properties.

Constant speed

The main function of such devices is the displacement of the output link with a given speed, which is installed with a given accuracy.

Most often these are electric drives that have a link with an angular displacement (rotation) at the exit.

In these devices, compared to devices of the first type, a speed sensor is installed instead of a position sensor, the output of which has a voltage level and sometimes a code, depending on the sensor type, is proportional to the speed of movement of the output link. Most often, a tachogenerator, which is a direct current generator, is used as such a sensor.

Basically the algorithm of the scheme is similar to the previous one.

Variable speed

The main purpose of such devices is the displacement of the output link RO at a given speed relative to each time point and for each current intermediate position of the link, i.e. the speed change mode in this case is an operating mode, while as in constant speed devices the speed change mode is a transient mode.

In the block diagram of such devices it is supposed to install an output level acceleration sensor and form a feedback signal proportional to this acceleration. The block also introduces blocks that prevent self-oscillation mode.

Tracking type (tracking systems)

In connection with the widespread introduction of electronic computers in automatic devices, the need emerged to create digital tracking systems and regulators. In cases where there is no such need, analog tracking systems and regulators are still used, which are notable for their simplicity.

The most common tracking systems are remote tracking systems for angular and linear movements.

They perform with a certain accuracy the transfer of angle or linear displacement with a given load on the output axis from analog and measuring elements or digital computers as setting devices, and the law of variation of the input axis movement or signal angle, speed and acceleration can have any form, including arbitrary and random function of time.

The specificity of these systems is associated with the requirements of obtaining the necessary accuracy of the transfer of angular and linear displacements.

In this thesis project uses a **positional type system**.

The main task of such devices is to set the output link of the regulator to a predetermined position with a given accuracy.

There are two types of such devices:

Positioning systems having two provisions that operate on the principle of open or close.

These devices are the simplest; sending feedback to the end position sensors, which, when triggered, turns off the executive part of the device.

Devices designed to accurately position the output level of the regulator at any given position that is within the working range of movement of the device. They are used in magnetic heads positioning systems in magnetic disk drives, in graphic recorders, etc. For this system was selected **stepper motor**.

2.4 Stepper motor

A stepper motor is a synchronous brushless electric motor with several windings in which the current supplied to one of the stator windings causes the rotor to lock. Sequential activation of the motor windings causes discrete angular displacements (steps) of the rotor.

Description

Structurally, stepper motors consist of a stator, on which excitation windings are located, and a rotor, made of magnetically soft or magnetically hard material. Stepper motors with a magnetic rotor allow you to get more torque and ensure the fixation of the rotor with de-energized windings.

Thus, the following types of stepper motor are distinguished by the rotor design:

- with permanent magnets (rotor of magnetically hard material);
- reactive (rotor of magnetic material);
- hybrid.

Hybrid engines combine the best features of variable resistive motors and permanent magnet motors.

The stator of the hybrid motor also has teeth, providing a large number of equivalent poles, unlike the main poles, on which the windings are located. Commonly used 4 main poles for 3.6 degrees. engines and 8 main poles for 1.8 - 0.9 degrees. engines. The rotor teeth provide less resistance to the magnetic circuit in certain positions of the rotor, which improves the static and dynamic moment.

This is ensured by the appropriate arrangement of the teeth, when part of the rotor teeth is directly opposite the stator teeth, and part between them.

The rotor of the hybrid engine has teeth located in the axial direction. The rotor is divided into two parts, between which there is a cylindrical permanent magnet. Thus, the teeth of the upper half of the rotor are the North poles, and the teeth of the lower half are the South. In addition, the upper and lower halves of the rotor are rotated relative to each other by half of the pitch angle of the teeth. The number of pairs of poles of the rotor is equal to the number of teeth on one of its halves. The serrated pole tips of the rotor, as well as the stator, are assembled from separate plates to reduce eddy current losses.

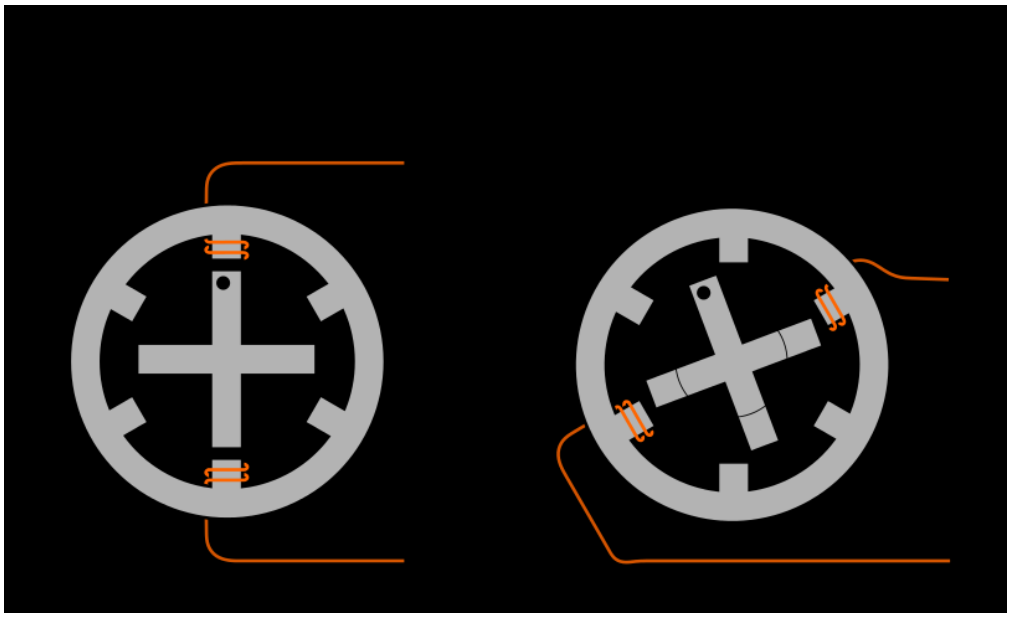

Picture 2.1 The principle of operation of the stepper motor

Utilization

In engineering, high-torque two-phase hybrid stepping motors with an angular displacement of 1.8 ° / step (200 steps / revolution) or 0.9 ° / step (400 step / rev) are most common. The accuracy of the step setting is determined by the quality of the machining of the rotor and stator of the electric motor. Manufacturers of modern stepper motors guarantee the accuracy of setting the step without load up to 5% of the step size.

Step increments create significant vibrations, which in some cases can lead to a decrease in torque and excitement of mechanical resonances in the system. The vibration level can be reduced by using the crushing step mode or by increasing the number of phases.

The mode of crushing a step (microstep) is realized with the independent control of the current of the windings of the stepping motor. By controlling the ratio of currents in the windings, you can lock the rotor in an intermediate position between the steps. Thus, it is possible to increase the smoothness of the rotor rotation and to achieve high positioning accuracy. The manufacturing quality of modern stepper motors allows to increase the positioning accuracy by 10-20 times.

Stepper motors are standardized by the National Association of Electrical Equipment Manufacturers in terms of flange dimensions and size: NEMA 17, NEMA 23, NEMA 34.

They create a relatively high torque at low rotational speeds, and the moment drops significantly with increasing speed. However, the dynamic characteristics of the motor can be significantly improved by using drivers with current-based PWM stabilization.

Stepper motors are used in drives of machines and mechanisms operating in start-stop mode, or in drives of continuous motion, where the control action is determined by a sequence of electrical impulses, for example, in CNC machines. Unlike servo drives, stepper drives allow precise positioning without the use of feedback from angle sensors.

These permanent magnet electric motors can be used as angle sensors due to the occurrence of EMF on the windings when the rotor rotates. At the same time, despite the convenience of use and good accuracy and repeatability, it is necessary to consider that:

- Without rotation of the shaft there is no EMF; it is impossible to determine the position of the standing shaft.
- It is possible to stop the shaft in the zone of unstable equilibrium (intermediate between the poles) of the SM. The subsequent launch of the shaft will lead to the fact that, depending on the sensitivity of the comparator, there will be an omission of this pole, or two pulses instead of one. In both cases, all further readings will be in error by one step. For almost complete, but not 100%, elimination of such behavior, it is necessary to apply a coupling with a corresponding hysteresis (angular play).

Benefits

The main advantage of stepper drives is accuracy. When applying the potentials to the windings, the stepping motor will turn strictly at a certain angle. The advantages of stepping drives include the cost, which is on average, 1.5-2 times cheaper than servos. A stepper drive serves as an inexpensive alternative to a servo drive, and is best suited for automating individual components and systems where high dynamics are not required.

Disadvantages

The possibility of "slipping" of the rotor is the most well-known problem of these engines. This can occur when the load on the shaft is exceeded, if the control program is set incorrectly (for example, the acceleration of the start or braking is not adequate to the displaced mass), as the rotational speed approaches the resonant one. The presence of a sensor allows one to detect a problem, but it can be automatically compensated without stopping the production program only in very rare cases. One way to avoid rotor slipping is to increase the engine power.

2.5 Controlling stepper motors

There are several ways to control stepper motors - full step, half-step and micro-step (Pic.2.2). Each of these styles offer different torques, steps and sizes.

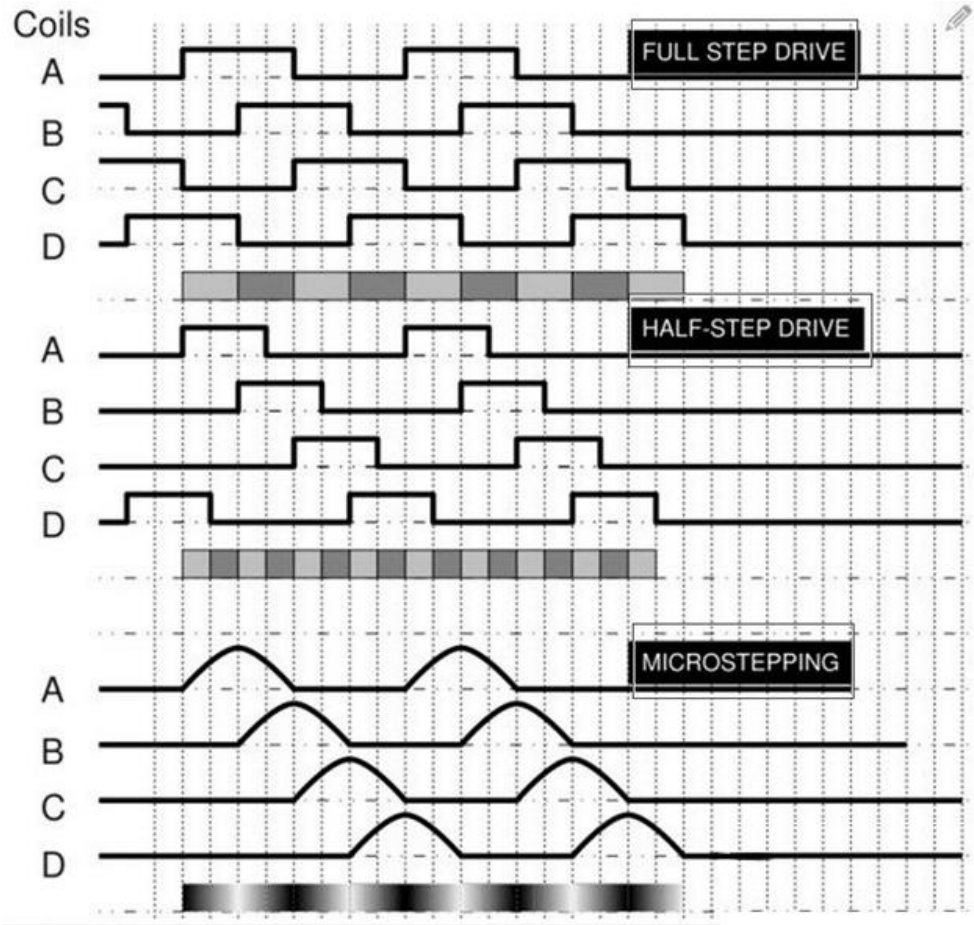

Picture 2.2 Control diagrams (A, B, C, D - motor windings.)

Full step - such a drive always has two electromagnets. To rotate the shaft, one of the electromagnets turns off and then the electromagnet is turned on, causing the shaft to rotate ¼ of the tooth (at least for hybrid stepper motors). This style has the strongest torque, but also the largest step size.

Half step. To rotate the central shaft, the first electromagnet is energized, like the first step, then the second is also energized, and the first still works on the second step. At the third step, the first electromagnet turns off and the fourth step turns on the third electromagnet, while the second electromagnet continues to work. This method uses two times more steps than a full step, but it also has less torque.

Microstepping has the smallest step size of all these styles. The torque associated with this style depends on how much current flows through the coils at a certain time, but it will always be less than with a full step.

Based on the previous sections and calculations, this graduation project utilizes the selected stepper motors: Nema 11, 14, 17, 23.

2.6 Description of Arduino Mega 2560

Arduino Mega 2560 is a device based on the ATmega2560 microcontroller. It includes everything necessary for convenient work with a microcontroller: 54 digital inputs / outputs (of which 15 can be used as PWM outputs), 16 analog inputs, 4 UART (hardware transceivers for implementing serial interfaces), a 16 MHz crystal resonator, a USB connector, a power connector, an ICSP connector for in-circuit programming, and a reset button. To start working with the device, it is enough to simply supply power from the AC / DC adapter or battery, or connect it to a computer via a USB cable. Arduino Mega is compatible with most expansion cards designed for Arduino Duemilanove and Diecimila.

The Arduino Mega 2560 differs from all previous boards in that it uses an ATmega16U2 microcontroller (ATmega8U2 in the R1 and R2 versions) to convert USB-UART interfaces instead of the FTDI chip.

The maximum length and width of the Mega2560 PCB is 10.2 cm and 5.4 cm, respectively, taking into account the USB connector and the power connector protruding beyond the limits of the board. Three mounting holes allow you to attach the board to the surface or housing.

2.7 Stepper Motor Control with Arduino Mega

In order to control the Nema 11, 14, 17, 23 engines, the Arduino Mega 2560 board with the DM542T and DM320T stepping motor drivers connected to it was selected in my project (paragraph 1.7).

The general connection diagram is shown in Pic. 2.3

The circuit has an eight-channel relay module, which is designed for an additional power source. Power supply of the relay module and the Arduino Mega 2560 board is supplied from a small 5 VDC power supply unit.

Stepper motors drivers are independently powered by 24VDC and controlled by an Arduino controller.

The scheme also contains 6 limit switches, which are installed on the manipulator itself. They are connected directly to the Arduino controller.

For control and programming of the manipulator, special software is used which is compatible with all systems (Windows, Mac OS, Linux).

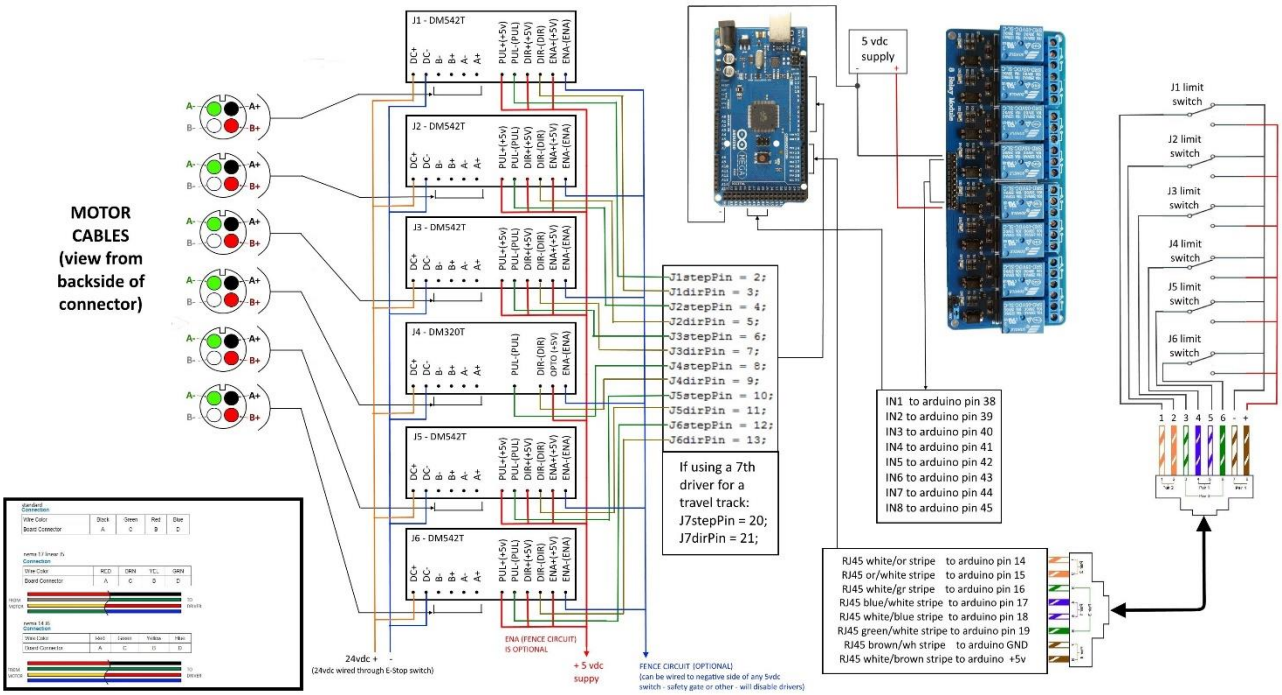

Picture 2.3 The general connection diagram

3. STUDY OF ELECTRIC DRIVE DYNAMICS

This section of the thesis deals with the simulation methodology of robotic systems, based on the integration of SIMMECHANICS MATLAB and computer-aided design systems (CAD systems).

3.1 What is SIMMECHANICS

SIMMECHANICS is a tool for studying the dynamics of a system of solids based on the construction of a model of such a system in the form of a block diagram in the SIMULINK MATLAB environment. With the help of SIMMECHANICS, mechanical systems are modeled, including both flat mechanisms and spatial, both simple (with one or two degrees of freedom) and complex (with many degrees of freedom). The modeling tools built into SIMMECHANICS allows one to describe solids with a high degree of accuracy, taking into account their mass-inertial characteristics, relative positions, degrees of freedom and relationships between them, as well as measure their movement parameters under the action of applied forces and moments in different coordinate systems.

SIMMECHANICS has visualization tools that provide a spatial representation of the mechanical system both at the beginning and during the modeling process. At the same time, SIMMECHANICS takes full advantage of the MATLAB graphics tools. In the case of using the CAD-translator, the model of the mechanism can also inherit a graphical representation of its details.

Picture 3.1 below presents the display of a dynamic model of a manipulator created in the SIMMECHANICS environment. It can be seen that using MatLab provides a significantly better graphic display of the model.

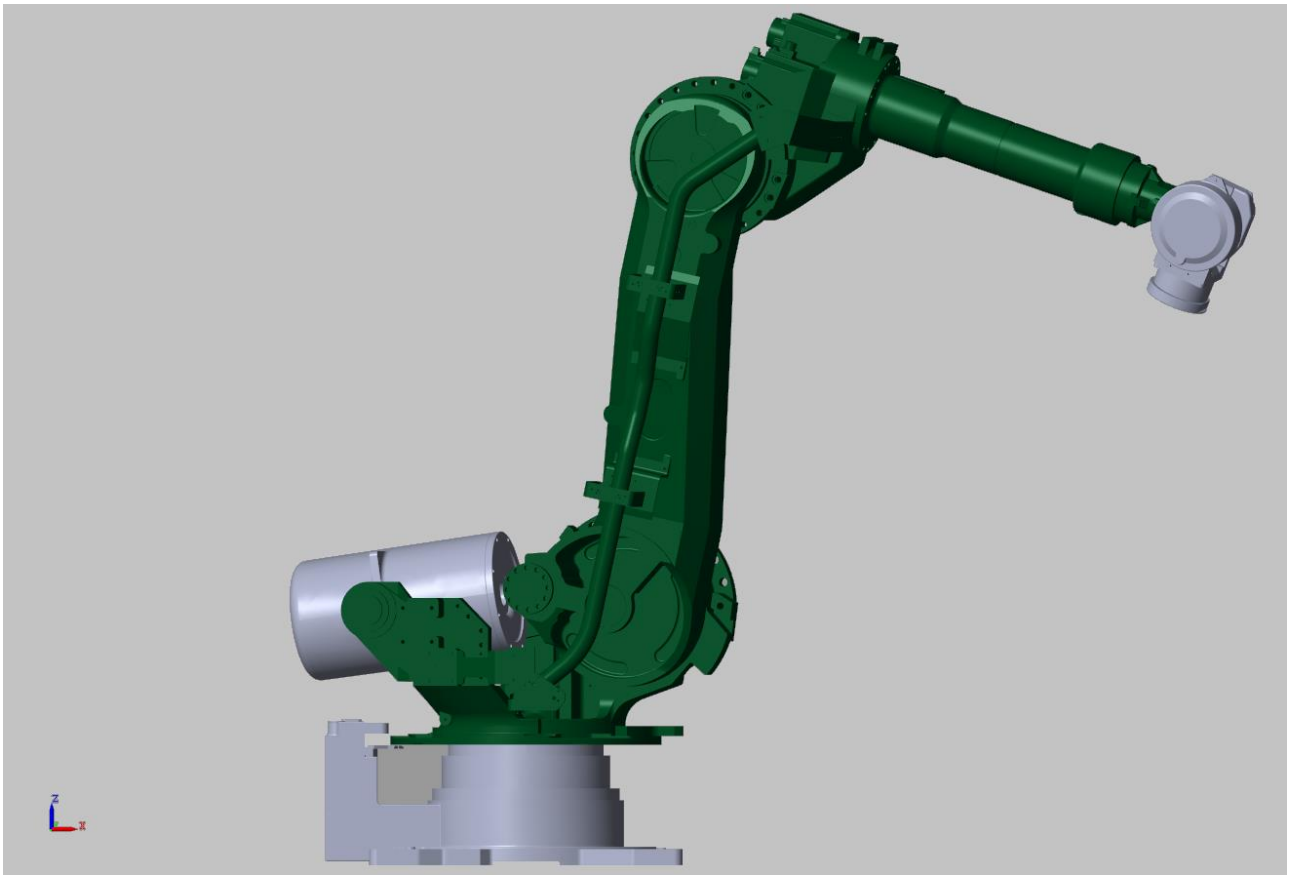

Picture 3.1 Graphic display of the dynamic model of the manipulator created using MatLab

3.2 Simulation of a stepper motor in Simulink

This section presents the simulation of a stepper motor in Simulink.

Picture 3.2 depicts a diagram of an electric drive based on a hybrid stepper motor.

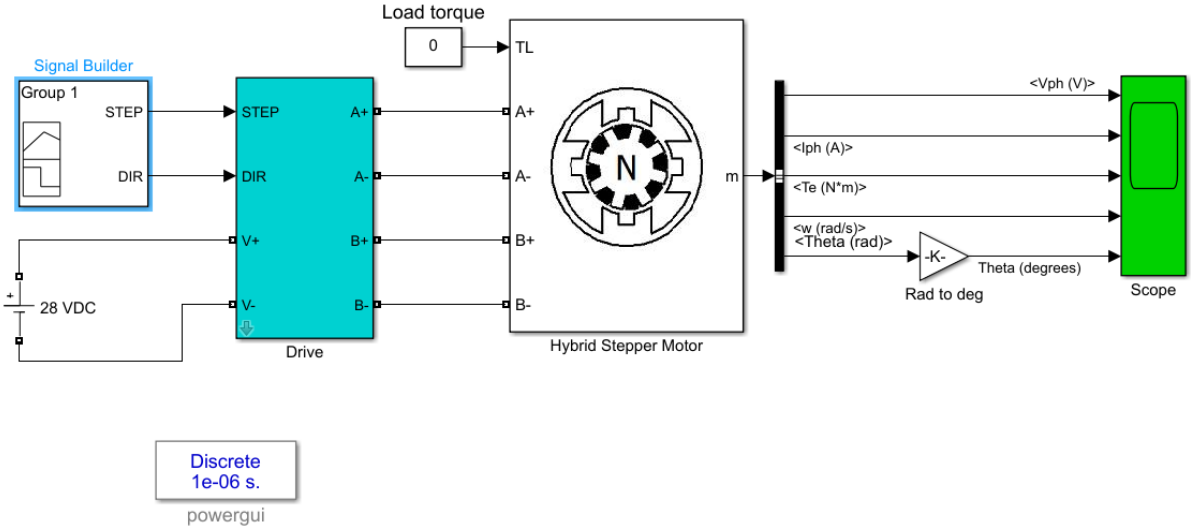

Picture 3.2 Electric drive based on hybrid stepper motor

The stepper motor is controlled by the STEP and DIR signals from the Signal Builder block (Pic.3.3). The STEP signal adjusts the angular displacement of a stepper motor: with a single signal, a stepped shift (pitch) of the rotor occurs, with a zero signal, a stop. The DIR signal regulates the direction of movement of the rotor: 1 - direct, 0 - reverse.

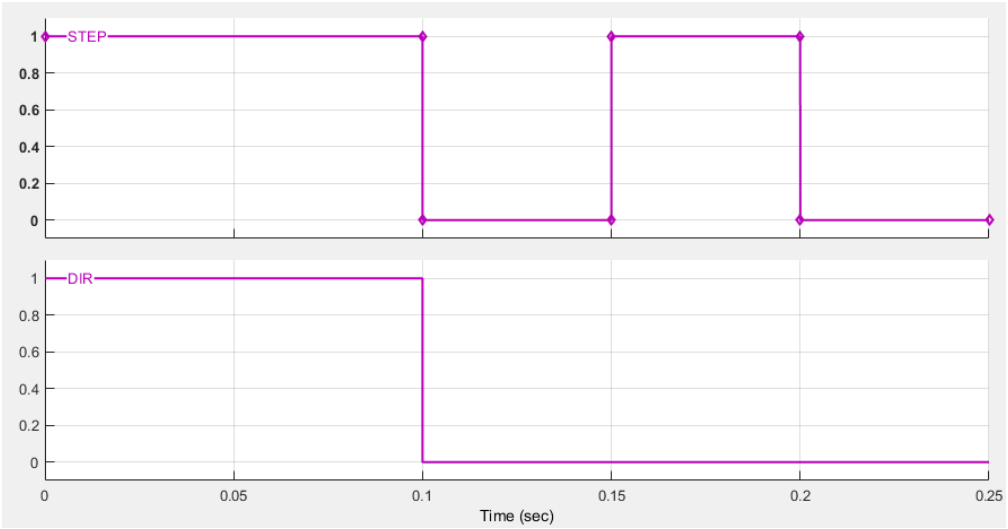

Picture 3.3 Settings the STEP and DIR signals in Signal Builder

The Drive unit is shown in Picture 3.4

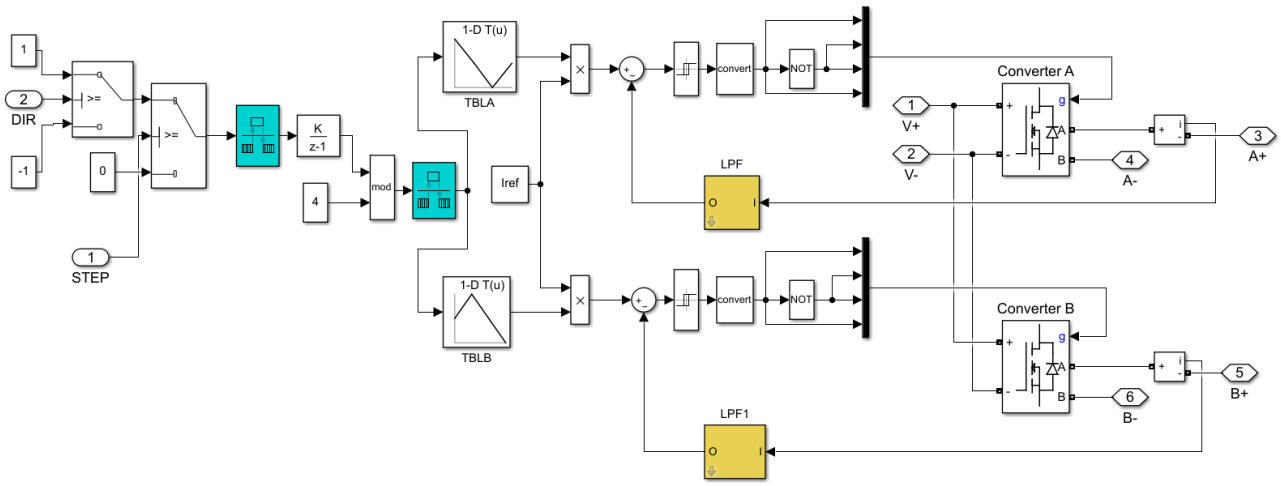

Picture 3.4 Block Drive

The block LPF1 is a discrete transmission (Figure 3.5)

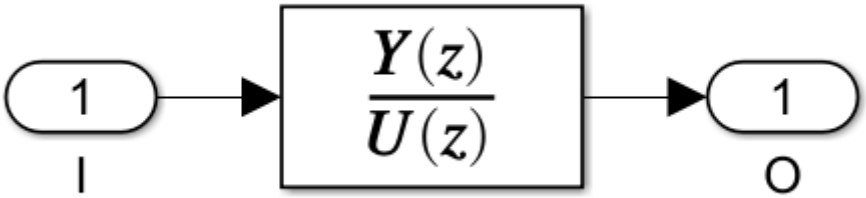

Picture 3.5 Discrete Transfer Fcn

For the model to work in SimPowerSystems, you need to add a Powergui block. The results of mathematical modeling of a stepper motor in SimPowerSystems are shown in Pic. 3.6, 3.7, 3.8 and 3.9.

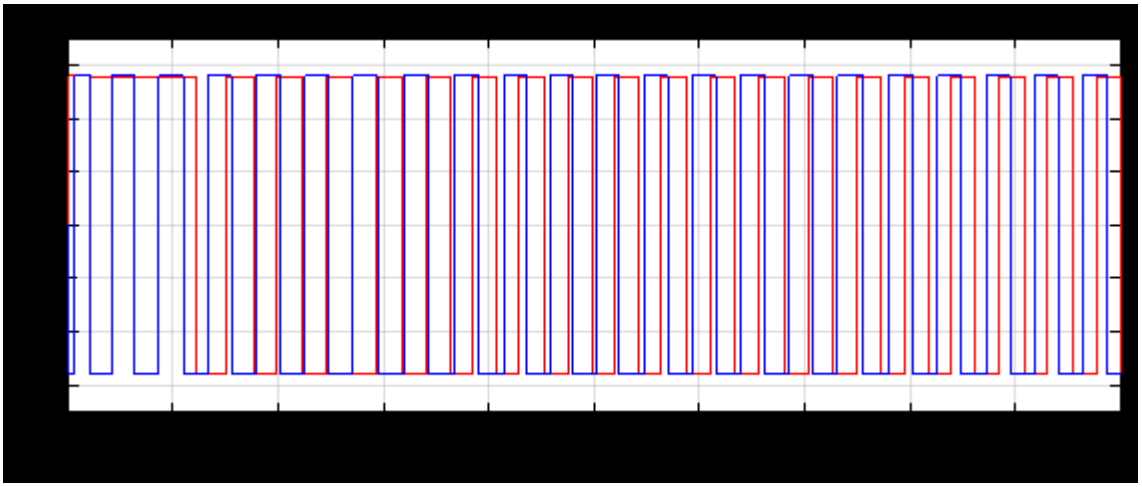

Picture 3.6 Voltage on two windings of a stepper motor

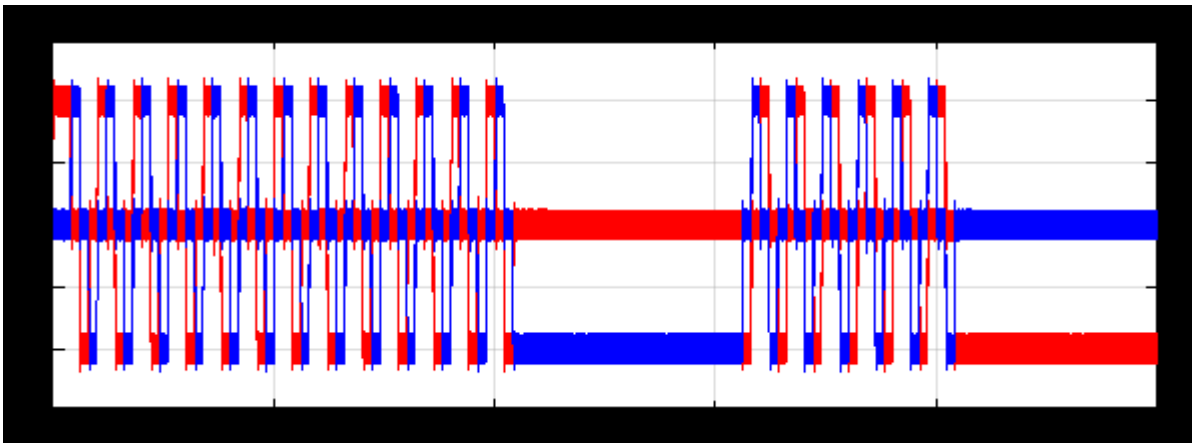

Picture 3.7 Currents on two stepper motor windings

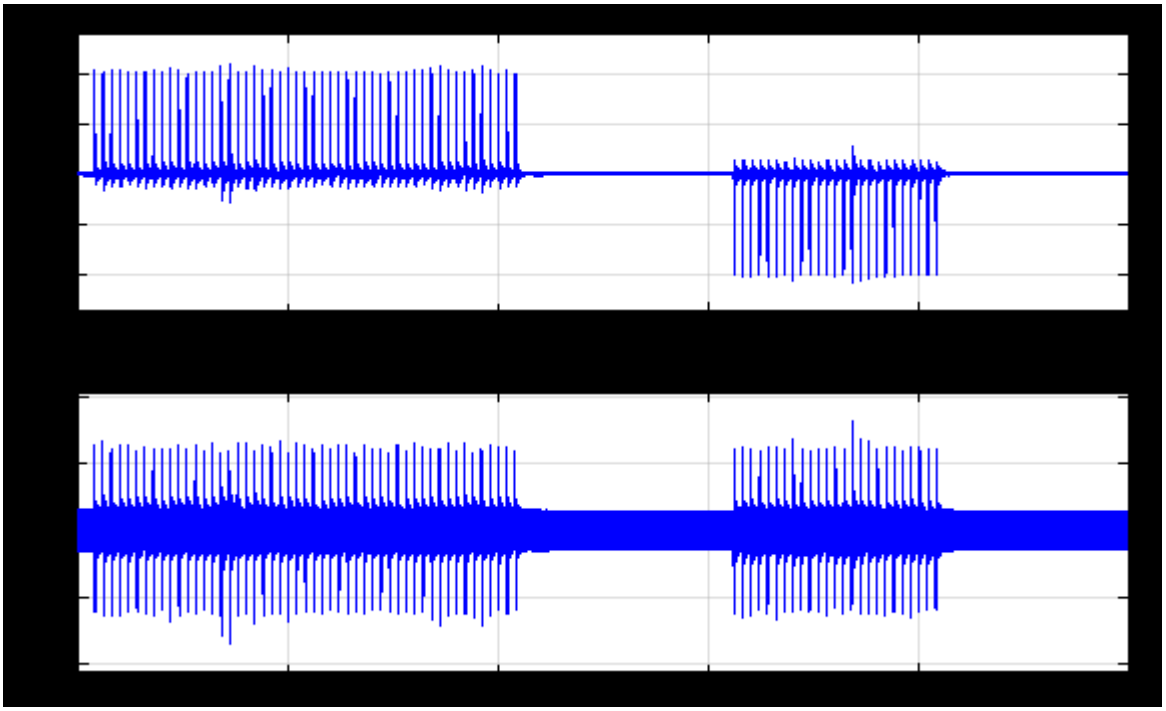

Picture 3.8 Speed and electromagnetic moment of a stepper motor

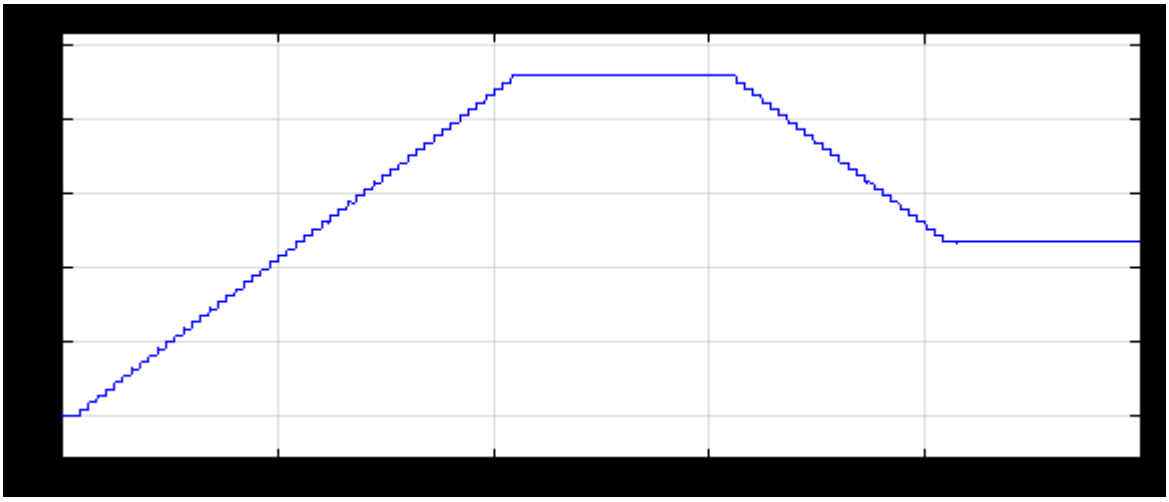

Picture 3.9 Angle of rotation on the shaft of the stepper motor

3.3 Simulation results in SimMechanics

In this section, the mechanical model of the manipulator in the MatLab program was modeled.

Picture 3.10 shows the mechanical model of the manipulator.

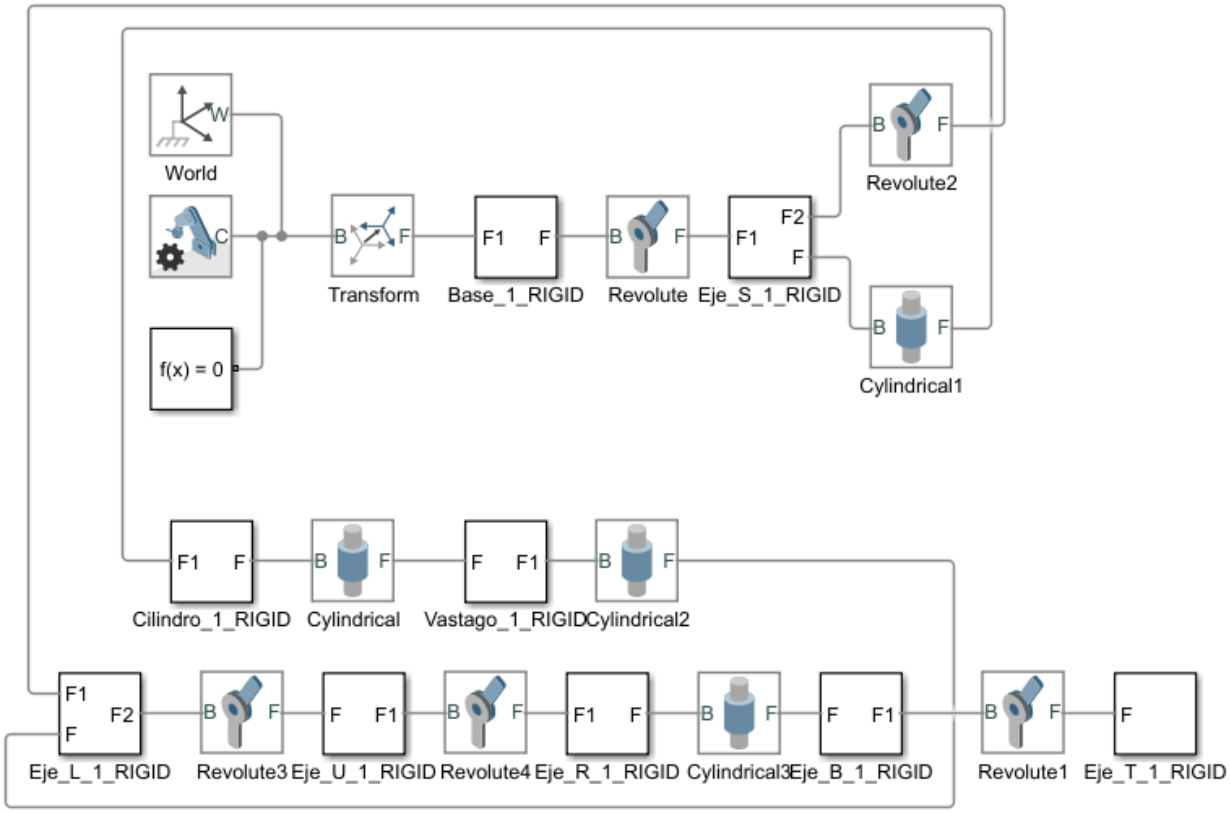

Picture 3.10 Mechanical model of the manipulator

The result of the simulation is shown in Picture 3.1.

Based on the work done, it can be said that the selected type of engines and the Arduino Mega 2560 controller are fully suitable for the task. The system is stable, the controller controls the engines smoothly, there are no failures in the program. In terms of the mechanical portion, the failure and malfunction are not detected, and the engines are not overloaded.

4. ECONOMIC JUSTIFICATION

Introduction

Today, industrial robot manipulators have fully enslaved almost all spheres of human life. Starting from enterprises and ending with the possibility of being universal assistants for people with special needs. This is not an accident. This phenomenon is due to the fact that automation allows not only a reduction in the cost of time to solve a problem, but also to improve the quality of its implementation.

The main factors of the effectiveness of the use of manipulators are:

- increasing equipment productivity or increasing labor productivity in operations performed by manipulators;
- increasing labor productivity as a result of replacing manual labor in a number of auxiliary operations (loading - unloading parts, tools, transporting parts, etc.) and basic technological operations (machining, welding, assembly, painting, etc.);
- increase in the rhythm of production;
- increasing the shift rate of equipment without increasing the number;
- reduction of losses associated with the characteristics of the human body (the constancy of work during the shift, etc.);
- improving the stability of product quality, reducing the percentage of marriage;
- reduction of working capital.

The use of manipulators allows solving social problems as well: changing the nature of labor, reducing injuries and occupational diseases, staff turnover, reducing the costs of an enterprise for maintaining social and community facilities.

The choice of the topic of the thesis was due to the following reasons:

- Accelerating product development processes;
- Improving product quality, which provides a high level of accurate performance of the task;
- Productivity increase. This is due to the possibility of using year-round and permanent robotics;
- Optimization of working space;
- The absence or reduction of various kinds of problems in production related to human factors;
- Payback in a short time;

At the expiration of the time, the opportunity to resort to the complete optimization of production for robotics became available to enterprises of not only large but also medium formats. Among such heightened interest in investing in robotics are the following:

- Reducing the cost of workforce. Robotic technology saves the cost of production, which favorably affects the competitive ability of the enterprise. Example: replacing working personnel with an industrial robot will save at least 25% on energy consumption and at least 9% on space heating. It is worth noting the reduction of wages, investment in staff training and other factors.
- Improving the quality of the product output. This factor comes up by itself. Since the high accuracy of the robotic system is able to provide a constant quality of the final product.
- The scale of production. In most cases, robotic technology is able to work without an interruption in performance. This factor is often used in production: it is possible to continue the work process at night or on weekends.
- Improving workplace safety for company employees. Production robots take over work in areas dangerous to human life and health. For example, when transporting heavy loads, which is unrealistic to raise a simple employee of the enterprise. Other examples include on sites of painting and use of other chemical compounds, and in areas with high temperature conditions. The list is endless. After

installing the robotic technology, employees of the company have every chance to improve the quality of their work and gain new experience in managing the robot.

- The waste of production is reduced by several times. This is due to the high accuracy of the tasks performed by the robot. As a result, at the outlet, the company receives a minimum of the waste part and a maximum of the final product.
- The possibility of reprogramming, multi-functionality. This means that any collaborative or industrial robot is easily reprogrammed from one task to another, which will also affect the fruitfulness of production in the future. Moreover, in some areas of production, robotics are practically indispensable.

This thesis proposes the creation of a six-coordinate robot manipulator in the framework of the exchange program for students of the NTU "Dnipro Polytechnic" and Reutlingen University (Germany) and use it as a laboratory stand at the Hochschule Reutlingen. This stand will help students understand such things as:

- device and principle of operation of industrial manipulator;
- the creation of models in the packages “AutoCad”, “SolidWorks” and their verification of the accuracy and correctness of the simulation;
- study of the kinematic system of the manipulator;
- programming in the environment of "Arduino IDE".

In the economic part, it is necessary to carry out the following calculations:

- Calculation of capital costs;
- Calculation of operating costs.

4.1 Capital Costs Calculation

Capital investment is money intended for the creation and acquisition of fixed assets and intangible assets that are subject to depreciation.

Capital investments for the implementation of a project technical solution may include:

- the cost of purchasing equipment, technology, technical means of control and accounting for the use of resources;
- the costs associated with construction and installation works;
- the costs associated with the installation and tuning works;
- the costs of design work, staff training, and other work necessary for the implementation of the technical solution.

When determining the value of the project investment (Кпр), you can use the formula:

$$\text{Кпр} = \text{Коб}(\sum_{i=1}^{\text{к}} \text{Ц}_i) + \text{Зтр} + \text{Зм} + \text{Зн} + \text{Зпр}, \qquad (4.1.1)$$

where: $\text{Коб}(\sum_{i=1}^{\text{к}} \text{Ц}_i)$ is the cost of purchasing electrical equipment (means of automation, software, etc.) for the project or the total cost of components of the i-th type necessary for the implementation of the technical solution;

к - number of necessary components;

Зтр - transport and storage costs;

Зм - the cost of installation work;

Зн - the cost of adjustment work;

Зпр - other one-time costs.

Table 4.1 Reducing capital costs

№	Name of technical means (component parts)	Quantity	Price per unit, EUR.	Amount, EUR.
1	Arduino Mega 2560	1	34.5	34.5
2	Arduino case	1	6.19	6.19
3	8 Channel DC 5V Relay	1	4.55	4.55
4	Ethernet cable	1	4.89	4.89
5	Switchcraft EHUSBBABX	1	7	7
6	Switchcraft RJ-Adapter	1	13.91	13.91
7	Red Mushroom Emergency	1	4.9	4.9
8	Hilitchi 30 Piece Nylon	1	10.39	10.39
9	ASI ASIUK5N Din Rail	1	24.42	24.42
10	15 Pcs 35mm Width Slotted	1	7.93	7.93
11	ASI ASIEB106 Din Rail	1	19.51	19.51
12	WINGONEER Prototype	1	20	20
13	Monoprice Access Series 18	1	28.61	28.61
14	4 Pin Metal Male Female	2	16	32
15	URBEST Inlet Module Plug	1	6.99	6.99
16	eBoot 130 Pieces Solderless	1	5	5
17	Cables Kit for breadboard	1	5	5
18	350W 24V 14.6A 115/230V	1	25	25
19	Digitaler Schrittmotortreiber	5	30	150
20	Switch Power Supply Driver	1	15	15
21	Digitaler Schrittmotortreiber	1	10	10
22	Nema 17 Stepper Motor	1	60	60
23	Nema 23 Stepper Motor	1	90	90
24	Nema 17 Stepper Motor	1	60	60
25	Nema 11 Stepper Motor	1	39	39
26	Nema 17 External 48mm	1	39	39
27	Nema 14 Stepper Motor	1	36	36
28	Nema 11 Bracket for Stepper	1	2	2
29	Uxcell a13112200ux0950	2	14	28
30	30206 Taper Wheel Bearing	2	14	28
31	Uxcell 30204 Single Row	1	8	8
32	Thrust Needle Roller Bearing	1	10	10
33	Koyo B-1616 Needle Roller	2	10	10
34	SKF HK 1612 Needle Roller	1	10	10
35	10Pcs 150 x 3mm Stainless	1	8	8

36	8pcs LM3UU 3mm linear	1	11	11
37	uxcell 10 Pcs 688Z Metal	1	9	9
38	30203 Taper Roller Wheel	1	6	6
39	Thrust needle-roller bearing	3	3	9
40	0.032" thick washer for 1"	4	1	4
41	0.126” thick washer for 1”	2	5	10
42	Gates 180XL037 PowerGrip	1	8	8
43	Gates 84XL037 PowerGrip	1	14	14
44	Gates 150XL037 PowerGrip	1	5	5
45	60T Timing Hub Pulley	1	5	5
46	Metric roller chain	2	7	14
47	Connecting Links	1	1	1
48	xl 15 tooth 8mm bore	2	6	2
49	2pcs 10 tooth 6mm bore xl	1	6	6
50	machinable-bore spocket,	2	12	12
51	Metric Key Stock (2mm X	1	1	1
52	Metric Key Stock (4mm X	1	4	4
53	Keyed Rotary Shaft (1045	1	20	20
54	High-Strength 2024	1	10	10
55	Square Head Extended Point	1	5	5
56	Gripper MHF2-8D1 SMC	1	170	170
57	Baomain Pneumatic Air	1	11	11
58	SV-166-1C25	5	10	50
59	XV-152-1C25	1	8	8
60	240pcs(30set) 2.5mm 3-Pin	1	10	10
61	274pcs(25set) 2.5mm 4-Pin	1	11	11
62	NBF-32026	1	50	50
63	NBX-32926-PL	1	20	20
64	IPV-1116	1	6	6
	TOTAL			1387.79

Calculation of transport and storage costs:

$$Зтр = Дdhl = 200\ euro, \quad (4.1.2)$$

where: $Дdhl$ – delivery DHL post

Calculation of the cost of setup work

$$З_{м(н)} = \sum(Ч_i \times а_i \times t_i) \times К_д \times К_{см} \times К_{пр}, \quad (4.1.3)$$

$$З_{м(н)} = 1 \times 12 \times 50 = 600\ euro$$

where: $Ч_i$ - the number of employees of the th grade, required to perform a certain amount of installation (debugging), people.

$а_i$ - hourly rate of the employee of the i-th category, EUR;

t_i - time required to perform a certain amount of installation (debugging), hours .;

$К_д$ - coefficient taking into account the amount of additional payments;

$К_{см}$ - coefficient taking into account a single social contribution;

$К_{пр}$ - coefficient, taking into account other expenses for implementation of installation (debugging) works.

In the project we accept:

$$Зпр = 200\ euro \quad (4.1.4)$$

$$Коб = 1500\ euro \quad (4.1.5)$$

Now we can calculate the value of the project investment by the formula (5.1.1):

$$К_{пр} = 1500 + 200 + 600 + 100 = 2400\ euro$$

4.2 Calculation of operating costs

Operating costs are the current costs of operating and maintaining the design object for the year, expressed in monetary form.

The main points of operating costs of electrical equipment include:

- depreciation (Ca);
- salary of service personnel (Cзп);
- A single social gathering (Cc);
- the cost of maintenance and repair (Cт);
- the cost of electricity that will be consumed by the object of design or loss of electricity (Cэ);
- other operating costs (Cпр).

Thus, annual operating costs will be:

$$C = Ca + Cзп + Cc + Cт + Cэ + Cпр, грн. \qquad (4.2.1)$$

4.2.1 Calculation of depreciation

Depreciation of the object of the main methods is calculated on the basis of its useful life. The useful life (operation) of the objects of the main methods and intangible assets is determined by the enterprise independently, based on the expected economic and technical benefits, and quality characteristics of the main method, moral and physical deterioration, as well as other factors that may affect the use.

In the project, the minimum permissible useful life is Tп = 2 years, since the manipulator belongs to the 4th group (machinery and equipment).

The value of fixed assets and intangible assets, which is depreciated, is the initial or revalued value of fixed assets and intangible assets minus their liquidation value:

$$Фа = Фп - Л, \qquad (4.2.1.1)$$

where: Фп - the initial cost of the object of the main methods;

Л - the estimated residual value of the main ways.

If it is difficult to determine the expected residual value of a fixed asset, then with a straight-line depreciation method, it is allowed to consider it equal to zero.

The depreciation rate for the straight-line method is constant over the entire depreciation period and is equal to:

$$На = \frac{Фп - Л}{Фп \cdot Тп} \cdot 100\% = \frac{3000-0}{3000 \cdot 2} \cdot 100\% = 50\%, \qquad (4.2.1.2)$$

where: Тп - useful life (depreciation period)

Then the annual depreciation of АО on a straight-line method:

$$АО = \frac{Фп \cdot На}{100} = \frac{3000 \cdot 50}{100} = 1500\ euro \qquad (4.1.2.3)$$

4.2.2 Calculation of the annual payroll

It is important to note that there is no permanent staff, so I think it will be necessary to clarify the algorithm for carrying out preventive measures and the use of specially trained personnel.

In this paragraph, the calculation is not carried out as it will be taken into account when determining the annual cost of maintenance and repair.

4.2.3 Calculating annual maintenance costs

Annual maintenance costs and in-line repairs of electrical equipment include the cost of materials, spare parts, and salaries for maintenance workers, and can be determined by the actual enterprises.

The calculation of the annual cost of equipment maintenance can be calculated by the formula:

$$Зтр = \sum_{i=1}^{n}(R_i \cdot t_i \cdot m_i \cdot R_{\sum i} + \frac{S_i + \Pi_i}{T_i} \cdot T\text{ф}), \qquad (4.2.3.1)$$

where: n is the number of parts that are subject to repair;

- R_i is the hourly rate of a worker who performs repairs, EUR;
- t_i is the laboriousness of one repair with the average category of repair (7);
- m_i is the number of average repairs per year (1);
- $R_{\sum i}$is the total category of repair complexity for DC machines from 0.5 to 5 kW (2.5);
- S_i - the cost of similar replacement elements, EUR;
- Π_i - the number of similar replacement elements;
- T_i- average service life of parts of this type, hours;
- $T\text{ф}$ - the number of hours of operation of the equipment per year, hours.

Calculate the annual maintenance costs according to the formula (4.2.3.1):

$$Зтр = \sum_{i=1}^{16}\left(12 \cdot 7 \cdot 1 \cdot 2.5 + \frac{30 * 5}{4380} \cdot 4380\right)$$

$$= \sum_{i=1}^{16}(210 + 150) = \sum_{i=1}^{16} 360 = 5760\ euro$$

4.2.4 Calculating the cost of power consumption

The cost of electricity consumed by the manipulator during the year is determined on the basis of its capacity, the annual fund of working time and energy losses according to the formula:

$$Сэ = Wг * Цэ = 182{,}5 * 1{,}5 = 273{,}75, euro \qquad (4.2.4.1)$$

Where: Wг = P·t = 182.5 - the amount of electricity consumed per year, kWh; Цэ - tariff for electricity, EUR / kWh.

4.3 Integrated method of calculating the costs associated with the manufacture of automation equipment

This tool is based on determining the factory production cost by the specific weight in it of certain elements of expenditure, because for the projected object and the analogue, the structure of individual elements of expenditure is kept within known limits. If at the stage of designing the question of the place of implementation of equipment in production is not resolved, then its production cost can be determined by the formula:

$$С_{пр} = З_{му} + З_{у}\left(1 + \frac{\alpha+\beta}{100}\right), \qquad (4.3.1)$$

where:

$З_{му}$ - the cost of basic materials and component parts in the projected equipment, EUR;

$З_{у}$ - the basic salary of workers employed in the manufacture of projected equipment(Table 5.1), EUR;

α - shop expenses, %;

β - general factory costs, %.

The basic salary of workers is determined by the aggregated method based on the signs of comparability:

$$З_{у} = З_{му}\left(\frac{У_{з}}{У_{м}}\right); = 1387{,}79 \cdot \frac{19}{28} = 941 \qquad (4.3.2)$$

Now let's calculate the formula (5.3.1)

$$С_{пр} = 1387{,}79 + 941\left(1 + \frac{167 + 75}{100}\right) = 4606{,}01\ euro$$

Total cost of the projected equipment:

$$С_п = С_{пр}\left(1 + \frac{\gamma}{100}\right) = 4606{,}01\left(1 + \frac{6{,}8}{100}\right) = 4919{,}22\ euro \qquad (4.3.3)$$

Calculate the profit included in the price of the equipment:

$$П = С_п \cdot \frac{R}{100} = 4919{,}22 \cdot 0.25 = 1229{,}8\ euro \qquad (4.3.4)$$

The basic selling price of the projected equipment is determined by the formula:

$$Ц_п = С_п + П + ПДВ = 4919{,}22 + 1229{,}8 + 1230{,}02 =$$
$$= 7379{,}04\ euro \qquad (4.3.5)$$

4.4 Findings

In this section of the thesis, the full economic calculation of the work done was made, the annual wages of the workers who serve the manipulator were determined, and the cost of the electricity consumed by the object was calculated.

In spite of the large initial investment, the automated manipulator will lower the cost of producing small batches in six months, due to the absence of costs for maintenance personnel and payment for the heating and lighting of the working room.

BIBLIOGRAPHY

1. Блинков Ю. В. Электромеханические системы: Учебное пособие.- Пенза: Изд-во Пенз. технол. ин-та, 2001.- 204 с.
2. Князевский Б.А. Охрана труда в электроустановках / Б.А.Князевский. – 3-е изд., перераб. и доп. – М.: Энергоатомиздат, 1983. – 336 с.
3. ОПД.Ф.02.04. Детали машин. Расчет передачи винт – гайка.
4. Довгань С.М. Методичні вказівки до виконання лабораторної роботи МЕМС-8 з дисципліни "Моделювання електромеханічних систем" для студентів напряму підготовки 0922 «Електромеханіка» / Упорядн.: С.М. Довгань, О.О. Азюковський, А.А. Самойленко. – Дніпропетровськ, Національний гірничий університет, 2005. – 26 с.
5. ДСТУ 3008-95ДОКУМЕНТАЦІЯ.ЗВІТИ У СФЕРІ НАУКИ І ТЕХНІКИ Структура і правила оформлення.
6. Електронне посилання: http://3dtoday.ru.
7. Електронне посилання: https://make-3d.ru

ADDITION

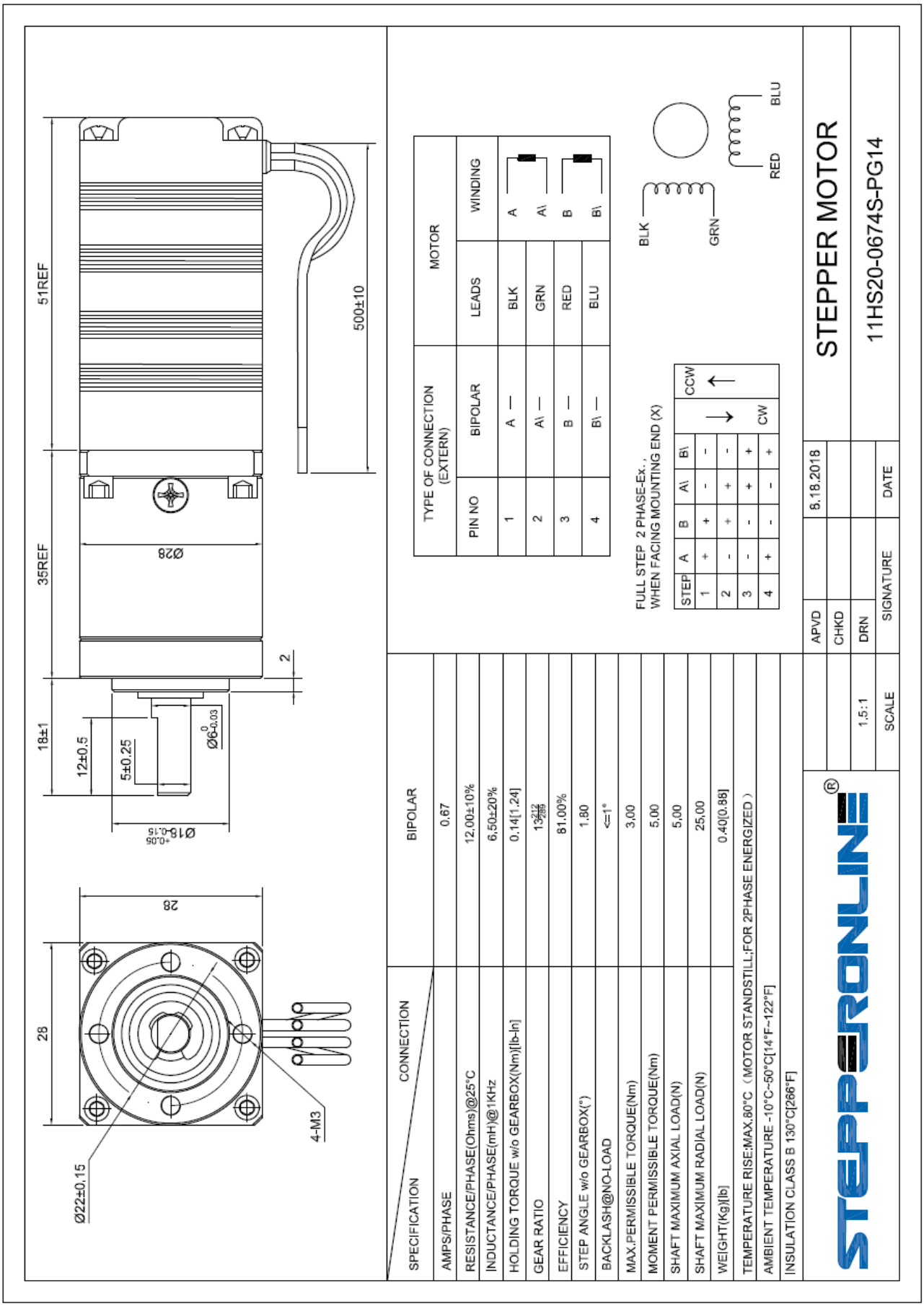
51REF
35REF
18±1
12±0.5
5±0.25
Ø6 0 -0.03
Ø18 +0.05 -0.15
2
Ø28
500±10
28
28
Ø22±0.15
4-M3
TYPE OF CONNECTION (EXTERN)
PIN NO
BIPOLAR
MOTOR
LEADS
WINDING
1 A — BLK A
2 A\ — GRN A\
3 B — RED B
4 B\ — BLU B\
FULL STEP 2 PHASE-Ex.,
WHEN FACING MOUNTING END (X)
STEP A B A\ B\
1 + + - -
2 - + + -
3 - - + +
4 + - - +
CCW
CW
BLK
GRN
RED
BLU
CONNECTION
SPECIFICATION
BIPOLAR
AMPS/PHASE 0.67
RESISTANCE/PHASE(Ohms)@25°C 12.00±10%
INDUCTANCE/PHASE(mH)@1KHz 6.50±20%
HOLDING TORQUE w/o GEARBOX(Nm)[lb-In] 0.14[1.24]
GEAR RATIO 13 212/289
EFFICIENCY 81.00%
STEP ANGLE w/o GEARBOX(°) 1.80
BACKLASH@NO-LOAD <=1°
MAX.PERMISSIBLE TORQUE(Nm) 3.00
MOMENT PERMISSIBLE TORQUE(Nm) 5.00
SHAFT MAXIMUM AXIAL LOAD(N) 5.00
SHAFT MAXIMUM RADIAL LOAD(N) 25.00
WEIGHT(Kg)[lb] 0.40[0.88]
TEMPERATURE RISE:MAX.80°C（MOTOR STANDSTILL;FOR 2PHASE ENERGIZED）
AMBIENT TEMPERATURE -10°C~50°C[14°F~122°F]
INSULATION CLASS B 130°C[266°F]
APVD
CHKD
DRN
SCALE 1.5:1
SIGNATURE
DATE 8.18.2018
STEPPERONLINE®
STEPPER MOTOR
11HS20-0674S-PG14

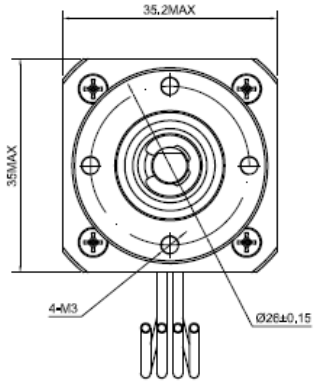

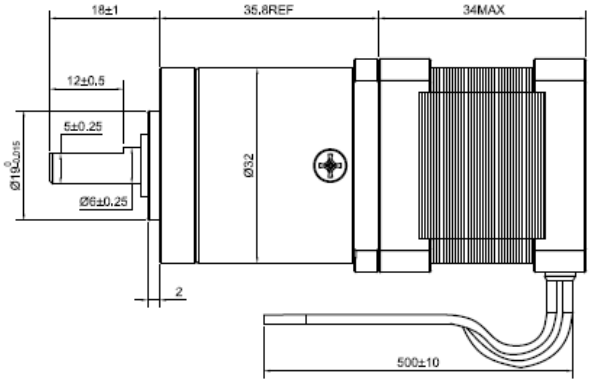

SPECIFICATION / CONNECTION	BIPOLAR
AMPS/PHASE	1.00
RESISTANCE/PHASE(Ohms)@25°C	3.20±10%
INDUCTANCE/PHASE(mH)@1KHz	4.50±20%
HOLDING TORQUE w/o GEARBOX(Nm)[lb-In]	0.14[1.24]
GEAR RATIO	$19\frac{38}{187}$
EFFICIENCY	81.00%
STEP ANGLE w/o GEARBOX(°)	1.80
BACKLASH@NO-LOAD	<=1°
MAX.PERMISSIBLE TORQUE(Nm)	3.00
MOMENT PERMISSIBLE TORQUE(Nm)	5.00
SHAFT MAXIMUM AXIAL LOAD(N)	50.00
SHAFT MAXIMUM RADIAL LOAD(N)	100.00
WEIGHT(Kg)[lb]	0.40[0.88]
TEMPERATURE RISE:MAX.80°C（MOTOR STANDSTILL;FOR 2PHASE ENERGIZED）	
AMBIENT TEMPERATURE -10°C~50°C[14°F~122°F]	
INSULATION CLASS B 130°C[266°F]	

TYPE OF CONNECTION (EXTERN)		MOTOR	
PIN NO	BIPOLAR	LEADS	WINDING
1	A —	RED	A
2	A\ —	GRN	A\
3	B —	YEL	B
4	B\ —	BLU	B\

FULL STEP 2 PHASE-Ex.,
WHEN FACING MOUNTING END (X)

STEP	A	B	A\	B\		CCW
1	+	+	-	-	↓	↑
2	-	+	+	-		
3	-	-	+	+		
4	+	-	-	+	CW	

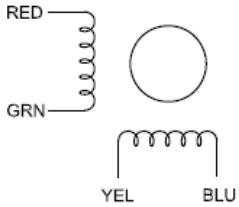

STEPPERONLINE®

	APVD		8.18.2018
	CHKD		
1:1	DRN		
SCALE	SIGNATURE		DATE

STEPPER MOTOR

14HS13-0804S-PG19

Изм. | Лист | № докум. | Подпись | Дата

ЕП.МР.18.14.Д.ПЗ

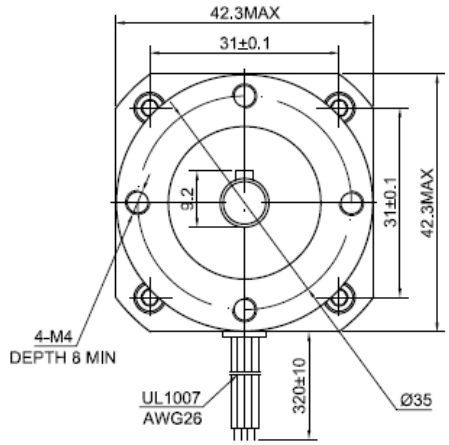

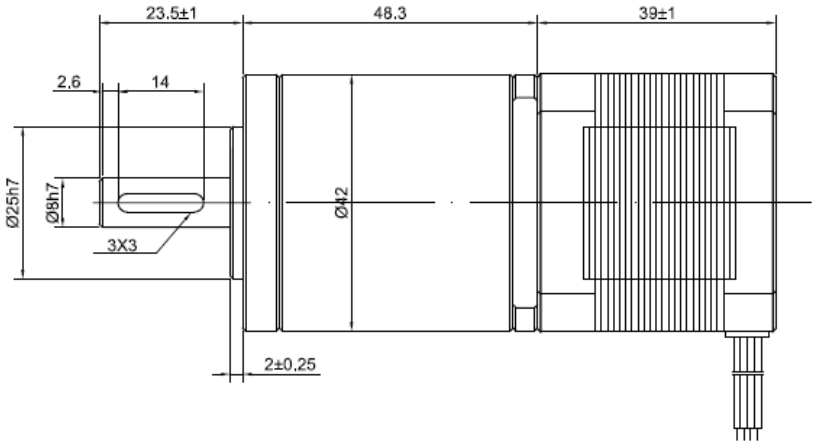

SPECIFICATION / CONNECTION	BIPOLAR
AMPS/PHASE	1.68
RESISTANCE/PHASE(Ohms)@25°C	1.60±10%
INDUCTANCE/PHASE(mH)@1KHz	3.20±20%
HOLDING TORQUE w/o GEARBOX(Nm)[lb-In]	0.39[3.45]
GEAR RATIO	20
EFFICIENCY	90.00%
STEP ANGLE w/o GEARBOX(°)	1.80
BACKLASH@NO-LOAD(arcmin)	<=25
MAX.PERMISSIBLE TORQUE(Nm)	15.00
MOMENT PERMISSIBLE TORQUE(Nm)	25.00
WEIGHT(kg)	0.88
LIFE(h)	20000.00
AMBIENT TEMPERATURE(°C)	-10 ~ 50
INSULATION CLASS	B
NOISE(dB)	<=50
MAX. RADIAL LOAD(N)	150

TYPE OF CONNECTION (EXTERN)		MOTOR	
PIN NO	BIPOLAR	LEADS	WINDING
1	A —	BLK	A
2	A\ —	GRN	A\
3	B —	RED	B
4	B\ —	BLU	B\

FULL STEP 2 PHASE-Ex.,
WHEN FACING MOUNTING END (X)

STEP	A	B	A\	B\		
1	+	+	-	-	↓ CW	CCW ↑
2	-	+	+	-		
3	-	-	+	+		
4	+	-	-	+		

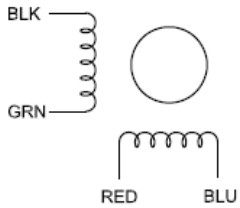

STEPPERONLINE®

	APVD		8.18.2018
	CHKD		
1:1	DRN		
SCALE	SIGNATURE		DATE

STEPPER MOTOR

17HS15-1684S-HG20

Изм.	Лист	№ докум.	Подпись	Дата

ЕП.МР.18.14.Д.ПЗ

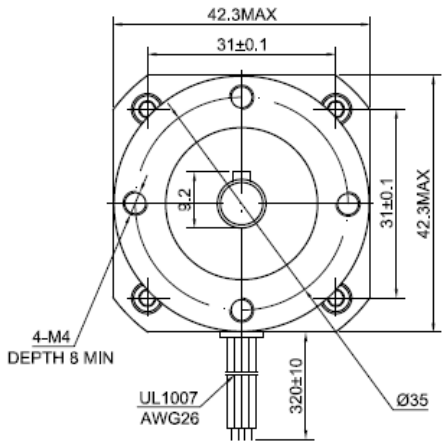

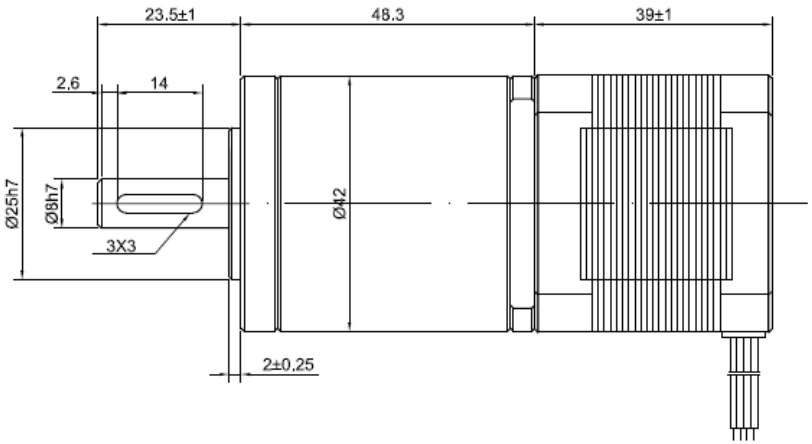

SPECIFICATION / CONNECTION	BIPOLAR
AMPS/PHASE	1,68
RESISTANCE/PHASE(Ohms)@25°C	1.60±10%
INDUCTANCE/PHASE(mH)@1KHz	3.20±20%
HOLDING TORQUE w/o GEARBOX(Nm)[lb-In]	0,39[3,45]
GEAR RATIO	50
EFFICIENCY	90.00%
STEP ANGLE w/o GEARBOX(°)	1.80
BACKLASH@NO-LOAD(arcmIn)	<=25
MAX.PERMISSIBLE TORQUE(Nm)	15.00
MOMENT PERMISSIBLE TORQUE(Nm)	25,00
WEIGHT(kg)	0.88
LIFE(h)	20000.00
AMBIENT TEMPERATURE(°C)	-10 ~ 50
INSULATION CLASS	B
NOISE(dB)	<=50
MAX. RADIAL LOAD(N)	150

TYPE OF CONNECTION (EXTERN)		MOTOR	
PIN NO	BIPOLAR	LEADS	WINDING
1	A —	BLK	A
2	A\ —	GRN	A\
3	B —	RED	B
4	B\ —	BLU	B\

FULL STEP 2 PHASE-Ex.,
WHEN FACING MOUNTING END (X)

STEP	A	B	A\	B\		
1	+	+	-	-	↓ CW	CCW ↑
2	-	+	+	-		
3	-	-	+	+		
4	+	-	-	+		

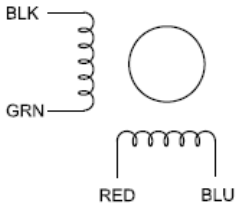

STEPPERONLINE®

	APVD		8.18.2018
	CHKD		
1:1	DRN		
SCALE	SIGNATURE		DATE

STEPPER MOTOR

17HS15-1684S-HG50

ЕП.МР.18.14.Д.ПЗ

Изм. | Лист | № докум. | Подпись | Дата

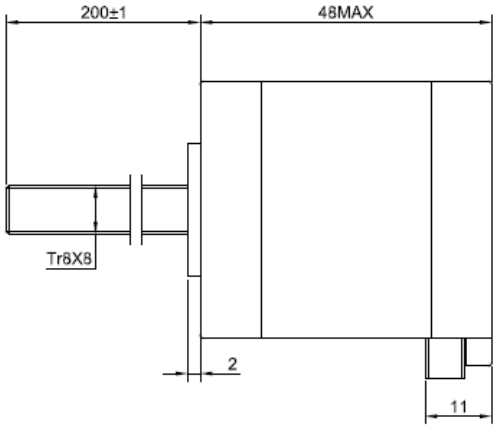

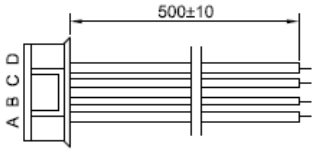

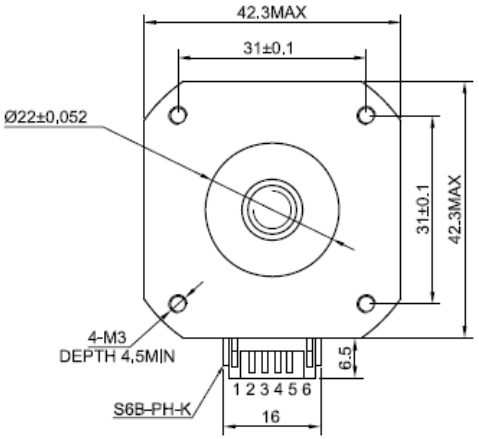

SPECIFICATION / CONNECTION	BIPOLAR
AMPS/PHASE	1,68
RESISTANCE/PHASE(Ohms)@25°C	1.65±10%
INDUCTANCE/PHASE(mH)@1KHz	2,80±20%
HOLDING TORQUE(Nm)[lb-In]	0,44[3,89]
LINEAR TRAVEL/STEP(mm)	0.04
STEP ANGLE(°)	1.80
STEP ACCURACY(NON-ACCUM)	±5.00%
ROTOR INERTIA(g-cm²)	68.00
WEIGHT(Kg)[lb]	0,35[0,77]

TEMPERATURE RISE;MAX,80°C（MOTOR STANDSTILL;FOR 2PHASE ENERGIZED）

AMBIENT TEMPERATURE -10°C~50°C[14°F~122°F]

INSULATION RESISTANCE 100 Mohm（UNDER NORMAL TEMPERATURE AND HUMIDITY）

INSULATION CLASS B 130°C[266°F]

DIELECTRIC STRENGTH 500VAC FOR 1MIN.(BETWEEN THE MOTOR COILS AND THE MOTOR CASE)

AMBIENT HUMIDITY MAX.85%(NO CONDENSATION)

TYPE OF CONNECTION (EXTERN)		MOTOR	
PIN NO	BIPOLAR	LEADS	WINDING
1	A —	RED	A
2	C —	GRY	C
3	B —	YEL	B
4	D —	GRN	D

FULL STEP 2 PHASE-Ex. ,
WHEN FACING MOUNTING END (X)

STEP	A	B	C	D		CCW
1	+	+	-	-	↓	↑
2	-	+	+	-		
3	-	-	+	+		
4	+	-	-	+	CW	

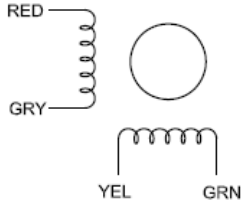

STEPPERONLINE®

	APVD		8.21.2018
	CHKD		
1:1	DRN		
SCALE	SIGNATURE		DATE

STEPPER MOTOR

17LS19-1684E-200G

ЕП.МР.18.14.Д.ПЗ

Изм. | Лист | № докум. | Подпись | Дата

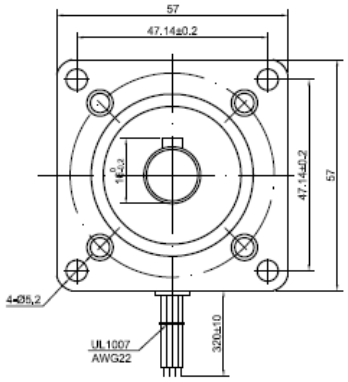

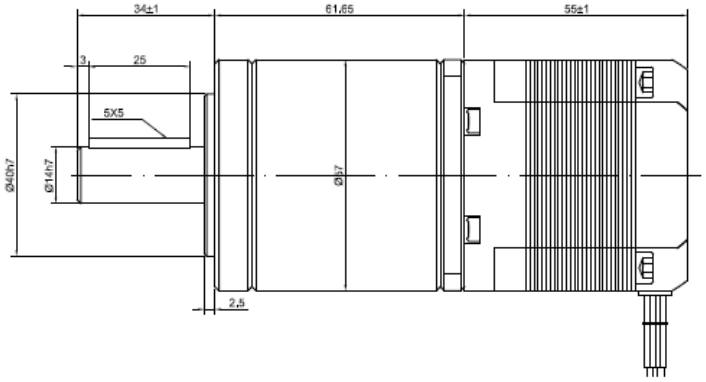

SPECIFICATION / CONNECTION	BIPOLAR
AMPS/PHASE	2.80
RESISTANCE/PHASE(Ohms)@25°C	0.90±10%
INDUCTANCE/PHASE(mH)@1KHz	2.80±20%
HOLDING TORQUE w/o GEARBOX(Nm)[lb-in]	1.03[9.12]
GEAR RATIO	50
EFFICIENCY	90.00%
STEP ANGLE w/o GEARBOX(°)	1.80
BACKLASH@NO-LOAD(arcmin)	<=25
MAX.PERMISSIBLE TORQUE(Nm)	25.00
MOMENT PERMISSIBLE TORQUE(Nm)	40.00
WEIGHT(kg)	1.80
LIFE(h)	20000.00
AMBIENT TEMPERATURE(°C)	-10 ~ 50
INSULATION CLASS	B
NOISE(dB)	<=50
MAX. RADIAL LOAD(N)	400

TYPE OF CONNECTION (EXTERN)		MOTOR	
PIN NO	BIPOLAR	LEADS	WINDING
1	A —	BLK	A
2	A\ —	GRN	A\
3	B —	RED	B
4	B\ —	BLU	B\

FULL STEP 2 PHASE-Ex.,
WHEN FACING MOUNTING END (X)

STEP	A	B	A\	B\		
1	+	+	-	-	↓ CW	CCW ↑
2	-	+	+	-		
3	-	-	+	+		
4	+	-	-	+		

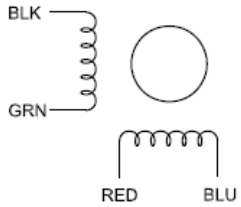

STEPPERONLINE®

	APVD		8.20.2018	STEPPER MOTOR
	CHKD			
1:1.5	DRN			23HS22-2804S-HG50
SCALE	SIGNATURE		DATE	

ЕП.МР.18.14.Д.ПЗ

Изм.	Лист	№ докум.	Подпись	Дата

PROGRAM CODE

```
void loop() {
  //test led
  if (digitalRead(J1calPin) == HIGH || digitalRead(J2calPin) == HIGH || digitalRead(J3calPin) == HIGH || digitalRead(J4calPin) == HIGH || digitalRead(J5calPin) == HIGH || digitalRead(J6calPin) == HIGH)
{
digitalWrite(J6dirPin, HIGH);
}
else
{
digitalWrite(J6dirPin, LOW);
}
while (Serial.available() > 0)
{
char recieved = Serial.read();
inData += recieved;
Process message when new line character is recieved
if (recieved == '\n')
{
String function = inData.substring(0, 2);
if (function == "SV")
{
int SVstart = inData.indexOf('V');
int POSstart = inData.indexOf('P');
int servoNum = inData.substring(SVstart + 1, POSstart).toInt();
servoPOS = inData.substring(POSstart + 1).toInt();
if (servoNum == 0)
{
servo0.write(servoPOS);
}
if (servoNum == 1)
{
servo1.write(servoPOS);
}
if (servoNum == 2)
{
servo2.write(servoPOS);
}
        if (servoNum == 3)
        {
          servo3.write(servoPOS);
        }
```

```
        if (servoNum == 4)
        {
          servo4.write(servoPOS);
        }
        if (servoNum == 5)
if (function == "JF")
      {
        int IJstart = inData.indexOf('X');
        int IJTabstart = inData.indexOf('T');
        int IJInputNum = inData.substring(IJstart + 1, IJTabstart).toInt();
        if (digitalRead(IJInputNum) == HIGH)
        {
          Serial.println("True\n");
        }
        if (digitalRead(IJInputNum) == LOW)
        {
          Serial.println("False\n");
        }
      }
      //-----COMMAND SET OUTPUT ON-------------------------------------------------
      //-----------------------------------------------------------------------
      if (function == "ON")
      {
        int ONstart = inData.indexOf('X');
        int outputNum = inData.substring(ONstart + 1).toInt();
        digitalWrite(outputNum, HIGH);
        Serial.print("Done");
      }
      //-----COMMAND SET OUTPUT OFF------------------------------------------------
-
      //-----------------------------------------------------------------------
      if (function == "OF")
      {
        int ONstart = inData.indexOf('X');
        int outputNum = inData.substring(ONstart + 1).toInt();
        digitalWrite(outputNum, LOW);
        Serial.print("Done");
```

```
/////CALC SPEEDS//////
        float ACCStep = (HighStep * (ACCdur / 100));
        float DCCStep = HighStep - (HighStep * (DCCdur / 100));
        float AdjSpeed = (SpeedIn / 100);
        //REG SPEED
        float CalcRegSpeed = (SpeedMult / AdjSpeed);
        int REGSpeed = int(CalcRegSpeed);

        //ACC SPEED
        float ACCspdT = (ACCspd / 100);
        float CalcACCSpeed = ((SpeedMult + (SpeedMult / ACCspdT)) / AdjSpeed);
        float ACCSpeed = (CalcACCSpeed);
        float ACCinc = (REGSpeed - ACCSpeed) / ACCStep;

        //DCC SPEED
        float DCCspdT = (DCCspd / 100);
        float CalcDCCSpeed = ((SpeedMult + (SpeedMult / DCCspdT)) / AdjSpeed);
        float DCCSpeed = (CalcDCCSpeed);
        float DCCinc = (REGSpeed + DCCSpeed) / DCCStep;
        DCCSpeed = REGSpeed;

        ///// DRIVE MOTORS /////
        while (J1cur < J1step || J2cur < J2step || J3cur < J3step || J4cur < J4step || J5cur
< J5step || J6cur < J6step || TRcur < TRstep)
        {

          ////DELAY CALC/////
          if (highStepCur <= ACCStep)
          {
            curDelay = (ACCSpeed / Jactive);
            ACCSpeed = ACCSpeed + ACCinc;
          }
          else if (highStepCur >= DCCStep)
          {
            curDelay = (DCCSpeed / Jactive);
            DCCSpeed = DCCSpeed + DCCinc;
          }
          else
          {
            curDelay = (REGSpeed / Jactive);
          }
```

FEEDBACK AND REVIEWS